City of Lake Geneva
626 Geneva Street
Lake Geneva, WI 53147
(262) 248-3673
www.cityoflakegeneva.com

FINANCE, LICENSE & REGULATION COMMITTEE-AMENDED

TUESDAY, OCTOBER 16, 2018 – 6:00 PM

CITY HALL, CONFERENCE ROOM 2A

Committee Members: Chairperson Ken Howell, Alderpersons: Selena Proksa, Doug Skates, John Halverson, and Rich Hedlund

Amended to add agenda item #13

AGENDA

1. Call to Order by Chairperson Howell

2. Roll Call

3. Comments from the public as allowed by Wis. Stats. §19.84(2), limited to items on this agenda except for public hearing items. Comments will be limited to 5 minutes

4. Approve the Regular Finance, License and Regulation Committee Meeting minutes of October 2, 2018, as prepared and distributed

5. **Licenses & Permits**

   a. 2018-2019 Original & Renewal Operator License applications filed by various applicants as listed in packet

   b. Discussion/Recommendation regarding a Temporary Class "B"/ "Class B" Retailer's License Application filed by JAMM Family Support, INC for the event of JAMM for Families Fundraising Celebration to take place om Sunday, November 11, 2018 from 5:00 p.m. to 8:00 p.m. located in the upstairs of the Riviera Ballroom

   c. Discussion/Recommendation regarding a Temporary Operator License Application filed by Robert Growe to be used at the event of JAMM for Families Fundraising Celebration

6. Discussion/Recommendation regarding City of Lake Geneva Assessment Services Proposals and Contracts for 2019-2021

7. Discussion/Recommendation regarding Fire Department purchase of a 2019 Ford Expedition not to exceed $46,000 to be purchased in 2018

8. Discussion/Recommendation regarding Police Department purchase of two 2019 Ford Police Interceptor Sedans not to exceed $60,854 to be purchased in 2018

9. Discussion/Recommendation regarding awarding a contract for the 2018 Lake Geneva City Hall Building Automation Control System Upgrade to Mared Mechancial

10. Discussion/Recommendation regarding Dog Park Fencing *(Public Works Committee recommended **denial** October 9, 2018)*

11. Discussion/Recommendation regarding purchase of new snow plow from the Equipment Replacement Fund

12. Discussion/Recommendation regarding possible placement of Ice Rink at Flat Iron Park

13. Discussion/Recommendation regarding Water Safety Patrol 2019 Lifeguard Services Agreement for $35,810

14. Discussion/Update of the September Treasurer's Report and Budget versus Actual

15. Presentation of Accounts

- **a.** Purchase Orders (none)
- **b.** Prepaid Bills in the amount of $47,314.26
- **c.** Regular Bills in the amount of $133,992.86

16. Adjournment

Requests from persons with disabilities, who need assistance to participate in this meeting or hearing, should be made to the City Clerk's office in advance so the appropriate accommodations can be made.

Posted 10/12/2018 4:00 pm cc: Committee Members, Mayor, Council, Administrator, Attorney

FINANCE, LICENSE & REGULATION COMMITTEE MINUTES
TUESDAY, OCTOBER 2, 2018 – 6:00 PM
CITY HALL, CONFERENCE ROOM 2A

Committee Members: Chairperson Ken Howell, Alderpersons: Selena Proksa, Doug Skates, John Halverson, and Rich Hedlund

Chairperson Howell called the meeting to order at 6:09 p.m.

Roll Call:
Clerk Kropf called the roll and noted that Howell, Proksa, Skates, Halverson, and Hedlund were present.

Comments from the public as allowed by Wis. Stats. §19.84(2), limited to items on this agenda except for public hearing items. Comments will be limited to 5 minutes
Charlie Lorenzi, of the Tourism Commission; Spoke in favor of the approval of the Events Coordinator Position and the benefits that this positions will bring to the City of Lake Geneva.

Approve the Regular Finance, License and Regulation Committee Meeting minutes of September 18, 2018, as prepared and distributed
Motion by Proksa to approve, second by Skates. No discussion. Motion carried 5-0.

Licenses & Permits

2018-2019 Original & Renewal Operator License applications filed by various applicants as listed in packet
Motion by Hedlund to approve, second by Halverson. No discussion. Motion carried 5-0.

Discussion/Recommendation of an Event Permit Application filed by Club Scoot Jockeys/Vespa Club of America/Midwest Action Cycle for the event of Amerivespa to be held on June 19, 2019 through June 23, 2019 at Flat Iron Park, Brunk Pavilion, and Wrigley Drive *(Approved by the Board of Park Commissioners on August 22, 2018 and tabled by the Finance, Licensing, and Regulation Committee on September 4, 2018)*
The Committee discussed that they needed more information about the event and how the street closure will be handled.

Motion by Skates to continue to a future meeting once more information is obtained, second by Howell. Motion carried 5-0.

Discussion/Recommendation of a Parking Stall Reservation Application filed by Lana Kropf, City Clerk, for the event of the November 6, 2018 Fall General Election *(Applicant is requesting waiver of all fees)*
Motion by Hedlund to approve, second by Halverson. No discussion. Motion carried 5-0.

Discussion/Recommendation regarding the City of Lake Geneva Property, Liability and Worker's Compensation Insurance Renewal for 2019
Interim City Administrator Berner introduced this item to the committee. He noted that our Insurance contact, Paul Lessla was available to answer any questions.
Motion by Proksa to suspend the rules to allow Mr. Lessla to address the committee, second by Halverson.
Lessla addressed the committee and noted that the premium amount had increased fairly significantly. This was due to the appraisal amount being increased by approximately $17 million. He could not locate any records of when the last appraisal would have been completed. He also suggested that the Committee look at renewing the policy with a $5,000 deductible instead of continuing the deductible at $1,000.

Motion by Proksa to approve the renewal of the insurance with the $5,000 deductible, second by Skates. Motion carried 5-0.

Discussion/Recommendation regarding replacement of Oak Hill Cemetery Office furnace
Clerk Kropf explained that this item was coming from the Public Works Director. She added that to get this old furnace fixed, it costs approximately $650 per service call however, the replacement cost would be approximately $2,000. Finance Director Hall explained that this would be paid from the Capital Outlay account.

Motion by Skates to approve the replacement to be paid from the Capital Outlay account, second by Hedlund. Motion carried 5-0.

Discussion/Recommendation to approve a payment to Vast Data Concepts, LLC d/b/a WebCemeteries.com in the amount of $3,397.04 for data entry work completed for digitalization of records for Oak Hill Cemetery *(Cemetery Board approved on September 19, 2018)*
Finance Director Hall addressed the committee regarding this outstanding invoice from WebCemeteries. She noted that this company was the first one to work on the Cemetery document digitalization project. They had completed their work late 2017 or early 2018 and the former City Administrator had signed off on it. This was still outstanding and that the company had completed their work and was still waiting for payment.

Motion by Halverson to approve, second by Hedlund. Motion carried 5-0.

Discussion/Recommendation regarding **Resolution 18-R64** a resolution establishing elected officials' salaries for 2019
Motion by Skates to approve, second by Hedlund. No discussion. Motion carried 5-0.

Discussion/Recommendation regarding the Capital Improvement Fund deficit
Hedlund stated that he is not in favor of borrowing to close the deficit. Finance Director Hall stated that there is a healthy general fund surplus and that those monies should be used per the City's fund balance policy.

Motion by Hedlund to approve moving $800,000 from the general fund to the capital improvement fund, second by Skates. Motion carried 5-0.

Discussion/Recommendation regarding Financing options for Riviera Restoration/Renovation Project
Interim City Administrator Berner explained that the current Riviera project will need to be completed and the City needs to identify how that will be paid for. He suggested that the City transfer $50,000 from the Lakefront Fund to the Capital Improvement Fund for those identified expenditures.

Motion by Skates to transfer $50,000 from the Lakefront Fund as discussed, second by Halverson. Motion carried 5-0.

Discussion/Review of Assessment Services Proposals
Clerk Kropf explained that the City's current assessment service contract will be expiring at the end of 2018. She added that the City did send out RFPs and two proposals were returned; one from Accurate (our current firm) and one from Associated. She asked that the committee read the proposals and review for further discussion at the next meeting. No action taken.

Discussion/Recommendation regarding Tourism Commission Event Coordinator Employment Contract
Motion by Hedlund to approve the contract for this independent contractor for the Tourism Commission, second by Halverson. No discussion. Motion carried 5-0.

Discussion/Recommendation regarding **Resolution 18-R65** a Resolution to consider Inclusion Under the Wisconsin Public Employers' Group Health Insurance Program *(A non-binding resolution indicating the City's intent to further review this potential health benefit option)*
Motion by Hedlund to approve, second by Halverson. No discussion. Motion carried 5-0.

Discussion/Recommendation regarding a Trial Service Agreement with Total Parking Solutions, INC for the trial testing of a new parking kiosk
Parking Manager Mullally addressed the committee regarding the proposed trial agreement. She added that this would be a free trial to look at newer technologies for the parking kiosks. The new kiosks would have a touch screen and she would like to run the trial when the parking service is shut down for the season. From there she could see how it works

with the current parking management software, parking staff, and the general public. The City will have this free trial for 120 days and the main kiosk will be placed in front of Potbelly's on Main Street.

Motion by Skates to approve and recommend to Council, second by Proksa. Motion carried 5-0.

Presentation of Accounts

Purchase Orders
None

Prepaid Bills in the amount of $36,901.61
Motion by Skates to approve, second by Proksa. No discussion. Motion carried 5-0.

Regular Bills in the amount of $160,237.32
Motion by Skates to approve, second by Proksa. No discussion. Motion carried 5-0.

Adjournment
Motion by Skates to adjourn, second by Halverson. Motion carried 5-0. The October 2, 2018 meeting of the Finance, License, and Regulation Committee adjourned at 7:16 p.m.

MINUTES ARE NOT OFFICIAL UNTIL APPROVED BY THE FINANCE, LICENSE, AND REGULATION COMMITTEE

Original License:
Dustin Dietrick

Renewal Operator:

Application for Temporary Class "B" / "Class B" Retailer's License

See Additional Information on reverse side. Contact the municipal clerk if you have questions.

FEE $ 10.00 *Application Date:* 10-5-18

☐ *Town* ☐ *Village* ☒ *City of* Lake Geneva *County of* Walworth

The named organization applies for: (check appropriate box(es).)

☒ *A Temporary Class "B" license to sell fermented malt beverages at picnics or similar gatherings under s. 125.26(6), Wis. Stats.*

☒ *A Temporary "Class B" license to sell wine at picnics or similar gatherings under s. 125.51(10), Wis. Stats.*

at the premises described below during a special event beginning 5 p.m. 11/11/18 *and ending* 8 pm 11/11/18 *and agrees to comply with all laws, resolutions, ordinances and regulations (state, federal or local) affecting the sale of fermented malt beverages and/or wine if the license is granted.*

1. Organization *(check appropriate box)* → ☐ Bona fide Club ☒ *Church* ☒ *Lodge/Society* Non-profit organization

☐ *Chamber of Commerce or similar Civic or Trade Organization*

☐ *Veterans Organization* ☐ *Fair Association*

(a) *Name* JAMM Family Support Inc

(b) *Address* _____ *(Street)* ☐ *Town* ☐ *Village* ☐ *City*

(c) *Date organized* Dec. 2015

(d) *If corporation, give date of incorporation* Dec. 2015

(e) *If the named organization is not required to hold a Wisconsin seller's permit pursuant to s. 77.54 (7m), Wis. Stats., check this box:* ☐

(f) Names and addresses of all officers:

President George Mac Intyre

Vice President Jim De Zeeuw

Secretary Staci Growe

Treasurer Jennifer Mac Intyre

(g) *Name and address of manager or person in charge of affair:* Jennifer & George Mac Intyre

2. Location of Premises Where Beer and/or Wine Will Be Sold, Served, Consumed, or Stored, and Areas Where Alcohol Beverage Records Will be Stored:

(a) *Street number* _____

(b) *Lot* _____ *Block* _____

(c) *Do premises occupy all or part of building?* Part

(d) If part of building, describe fully all premises covered under this application, which floor or floors, or room or rooms, license is to cover: The entire upstairs of The Riviera Ballroom

3. Name of Event

(a) *List name of the event* JAMM For Families Fundraising Celebration

(b) *Dates of event* Sunday November 11, 2018

DECLARATION

The Officer(s) of the organization, individually and together, declare under penalties of law that the information provided in this application is true and correct to the best of their knowledge and belief.

JAMM Family Support, Inc.
(Name of Organization)

Officer [signature] *(Signature/date)* Officer [signature] *(Signature/date)*

Officer _____ *(Signature/date)* Officer _____ *(Signature/date)*

Date Filed with Clerk _____ *Date Reported to Council or Board* _____

Date Granted by Council _____ *License No.* _____

AT-315 (R. 11-15) *Wisconsin Department of Revenue*

Receipt # _____

SUPPLEMENTAL APPLICATION FORM
TEMPORARY CLASS "B" / "CLASS B" RETAILER'S LICENSE
CITY OF LAKE GENEVA

This form needs to be submitted as an attachment to the Application for Temporary Class "B" / "Class B" Retailer's License Form (Form AT-315) and returned to the City Clerk.

Applicant Organization: JAMM Family Support, Inc.

Name of Event: JAMM For Families Fundraising Celebration

Date of Event: Sunday November 11, 2018

Time of Event: 5:00p.m. *(Beginning)* 8:00p.m. *(Ending)*

Event Contact Person: Jennifer MacIntyre

Contact Phone: _____ _____

Contact Email: _____

Will a Licensed Operator be serving or supervising the service of alcohol?
***This <u>includes</u> Temporary Operator's who <u>have</u> completed the Responsible Beverage Servers class.**

☒ Yes ☐ No

PLEASE FILL ALL BLANKS COMPLETELY.
THIS INFORMATION IS NEEDED TO COMPLETELY PROCESS YOUR TEMPORARY RETAILER'S LICENSE APPLICATION.

For Office Use Only

Date Filed: 10/5/18 *Receipt No:* 10-001902

Total Amount: $10.00

Forwarded to Police Chief: 10/5/18

Recommendation: _____ *Approved* *Denied*

Verification that not more than 2 temporary wine licenses have been issued to this applicant within the last 12 months: _____

FLR Approval: 10/16/18
Council Approval: 10/22/18

License Issued: _____
License Number: _____
License Expires: _____

MAILTO: *Organization*

CITY OF LAKE GENEVA
TEMPORARY OPERATOR LICENSE

PLEASE FILL IN ALL BLANKS COMPLETELY, AS INCOMPLETE APPLICATIONS WILL BE REJECTED. ***FEE OF $10.00 IS PAYABLE TO CITY OF LAKE GENEVA AND DUE UPON APPLICATION.***

NOTE: This license shall be issued to persons under the terms of Wisconsin State Statutes 125.17 (4). License shall be issued only to operators employed by or donating their services to non-profit corporations. A maximum of two temporary operator licenses will be issued to any individual per year. This license shall be valid only for the period of time specified on the license, which time period shall not exceed fourteen (14) days.

APPLICANT INFORMATION

Name: Growe Robert Francis
Last First Middle

Maiden Name: — Date of Birth: 4-4-81

Address (Physical): _

Mailing Address (if different): —

City, State, Zip: __

Phone Drivers License #: _

Email: _____

Is your Certificate of Completion of a Beverage Server Training Course Attached? YES (NO)

If No, will a Licensed Operator be serving or supervising the service of alcohol? (YES) NO

ORGANIZATION WHERE SERVICES OF LICENSEE WILL BE EMPLOYED

Organization Name: JAMM Family Support, Inc. → at Riviera Ballroom

Address: 812 Wrigley Drive, Lake Geneva

Name of Event where licensee will work: JAMM for Families Fundraising Celebration

Date of Event: Sunday November 11, 2018

APPLICANT SIGNATURE

Robert Growe via Jennifer Mattity DATE: 10-5-18

APPROVED BEVERAGE SERVER TRAINING COURSES

Serverlicense.com	Learn2serve.com	Wisconsin Technical Colleges
Servingalcohol.com	$8 Server Training	ServSafe Alcohol (WRAEF/NRAEF)
TIPS	CARE	TEAM

For Office Use Only

Date Filed: 10/5/18 Receipt No: 10.001903

Total Amount: $10.00

Forwarded to Police Chief: 10/5/18

Background Completed: _____

Recommendation: _____ Approved Denied

Verification that no other temporary licenses have been issued to this applicant in the current year: _____

FLR Approval: 10/16/18 License Issued: _____

Council Approval: 10/22/18 License Number: _____

License Expires: _____

MAILTO: Individual, Organization

OFFICE OF THE CITY CLERK

LANA C. KROPF
626 Geneva Street
Lake Geneva, WI 53147
262.249.4092 • cityclerk@cityoflakegeneva.com

Date: October 16, 2018

To: Finance, License, and Regulation Committee

Re: Assessor Requests for Proposals

The City of Lake Geneva's contract for Assessment Services is expiring at the end of 2018. In July 2018 the City sent requests for proposals to five firms and received two proposals back; one from Accurate Appraisal (our current firm) and from Associated Appraisal Consultants, Inc.

Both firms were asked to prepare a contract and scope of services that would serve the City for a three-year term (2019, 2020, & 2021).

Here is the comparison between the two firms based on their proposals:

Accurate Appraisal

- Two Price/Scope Options- Option #1: Blend Market Revaluation/Maintenance= $33,000 per year; Option #2: Full Value Program= $41,000 per year
- Option#1: Maintenance would change assessments to properties that have had building permits issued to them or properties that have changed
- Option #2: A Full Value Program also takes into consideration the sales/market conditions for the City and based on that the assessor will increase or decrease based on neighborhood and style of home
- The City of Lake Geneva has had a Full Value Program every year since 2011; this has greatly reduced the number of residents attending open book and board of review as there isn't a dramatic increase in property values

Associated Appraisal

- Two Price/Scope Options- Option #1: Maintenance= $40,000 per year; Option#2: Option #1 plus Interim Market Update in 2020or 2021= additional $60,000 to the annual $40,000
- Option #1: Maintenance would change assessment to properties that have had building permits issued to them or properties that have changed
- Option #2: A Interim Market Update would update properties based on markets/sales; this option would cost the City an additional $60,000

With the City of Lake Geneva providing a Full Value Maintenance since 2011, it has drastically decreased the number of attendees at Open Book and Board of Review. This has been a very successful program for the City.

Representatives from both firms have made themselves available for this meeting, should you have any questions or concerns.

Thank you,

Agreement for Full-Value Maintenance Services

Prepared for:

City of Lake Geneva

By

Accurate Appraisal, LLC.

1428 Midway Road P.O. Box 415 Menasha, WI 54952-0415
phone 920.749.8098 \ 800.770.3927 fax 920.749.8099 info@accurateassessor.com

AGREEMENT FOR FULL VALUE MAINTENANCE

Section I

This agreement made this _____ day of _____, 2014 by and between the City of Lake Geneva, Walworth County, State of Wisconsin, party of the first part, hereinafter referred to as "Client",

AND

ACCURATE APPRAISAL LLC., PO BOX 415, MENASHA, WI 54952, party of the second part, hereinafter referred to as "Accurate".

SCOPE OF SERVICES

Accurate shall provide the Client with assessing services by Wisconsin Department of Revenue Certified Personnel for the 2015-2018 assessment years which includes the following:

1. Accurate shall update and maintain 100% real property assessment records for the Client. Said service shall include all assessing services so as to comply with all applicable Wisconsin statutes, codes, rules, and/or regulations, including the assessment of all new construction, remodeling, additions and changes relating to improvements removed for any reason such as fire, demolition, etc. through building permits. Accurate shall reapportion value brought about through property splits. This service shall also include all property values be kept in market value compliance in accordance with the Wisconsin Department of Revenue's yearly equalized values.

2. Accurate shall prepare and mail personal property blotters from a list supplied by the Client of the accounts to be assessed. Accurate will analyze returned personal property blotters from the merchants in order to establish the proper assessment.

3. Accurate shall, without additional expense to the Client, be required to attend Open Book and all Board of Review meetings and shall be responsible for defending all assessments. The Open Book meeting shall be conducted as needed. The meetings shall be scheduled by Accurate with the Clerk. The Open Book meetings shall be completed no later than the agreement date specified in Section III of this agreement.

4. Accurate shall enter real estate and personal property assessments in the current assessment roll so that it may be submitted to the Board of Review.

5. Accurate shall retain the right to employ additional certified personnel at Accurate's expense as deemed necessary to complete the assessment roll in a timely manner. Responsibility for the content and accuracy of the assessment roll regardless of the use of other personnel shall, however, rest with Accurate.

6. The Client's responsibilities will be to supply Accurate with adequate office space in or near the Client's Hall. Items to be mailed such as, but not limited to, assessor's final report and personal property blotters will be the responsibility of Accurate.

7. The Client will hold harmless Accurate from third claims and liabilities due to the assessment of property except claims or liabilities, which result from the intentional or negligent acts or omissions of Accurate, its employees, agents and representatives, shall be the responsibility of Accurate.

8. This agreement between the Client and Accurate shall be for the aforementioned assessment year beginning January 1st, 2015 and ending December 31st, 2018. It is expected the work will commence with the mailing of personal property blotters and be completed after the final adjournment of the Board of Review and any necessary follow up questions and/or work because of appeals of Board of Review decisions.

9. Accurate shall submit monthly invoices based upon a percentage complete. The Client reserves the right to retain a 10% holdback pending final completion of all terms and conditions of the contract.

10. Accurate shall provide advice and opinion for assessment matters and will defend values through the appeal process beyond the Open Book and Board of Review.

11. Accurate shall complete its Open Book hearings under this agreement no later than the agreement date, specified in Section III of this agreement, except for delays caused by the Client, county or state. Accurate may request a thirty-day extension to the contract upon written agreement with the Client.

12. Accurate shall maintain full insurance coverage to protect and hold harmless the Client. Limits of liability shall be not be less than the amounts listed below in this contract:

INSURANCE COVERAGE

General Liability	
General Aggregate	$ 4,000,000
Each Occurrence	$ 2,000,000
Personal & Adv Injury	$ 2,000,000
Products-Comp/Op Agg	$ 4,000,000
Fire Damage	$ 300,000
Medical Expense	$ 10,000

13. Accurate shall consider the cost approach, market approach, and income approach in the valuation of all land and improvements where applicable.

14. Accurate shall use Computer Assisted Mass Appraisal software to accurately provide the Client with records of the maintenance and revaluation. For both residential and commercial valuation, Global Valuation Systems or the C.A.M.A software developed by Accurate will be utilized following market data, Volume II of the Assessor manual and Marshall & Swift cost tables. The yearly maintenance fee associated with the use of either program will be at no additional cost to the Client. The data will be available to the public on accurateassessor.com; building data and appointment scheduling will also be available at no additional expense to the Client.

15. Photographs of all improved parcels will be taken digitally at no additional expense to the Client.

16. All expenses incurred by Accurate during the contract such as postage, phone calls, etc…., will be at no additional expense to the Client.

17. Accurate will promote understanding of the assessment process with taxpayers and the Client. The Client and Accurate shall work to maintain good public relations throughout the assessment program.

18. Accurate will not employ as a director, officer, employee, agent, contractor, or subcontractor, directly or indirectly in any capacity, any elected or appointed official of the Village or any member of his/her immediate family.

19. All work will be performed by personnel certified by the State of Wisconsin, Department of Revenue. Accurate will provide and update the Village with a listing of personnel assigned to the Project. All project personnel assigned shall be approved by the Village. During the Period of Agreement, and for a period of six (6) months following the project completion date, the Village will not solicit for employment or hire any company employee without the express written consent of Accurate.

Section II

Parcel Totals:

Residential Total = 3,891

Residential Improved = 3,377

Commercial Total = 580

Commercial Improved = 493

Agricultural = 305

Other Total = 1

Other Improved = 1

Section III

Agreement for Full Value Maintenance

Provided by Accurate Appraisal, LLC.

For

City of Lake Geneva, Walworth County for the assessment years 2015-2018

Dated this 5th day of FEBRUARY 2015.

Agreement completion date of July 31st, each year for full value

Fee for services rendered:

Accurate shall be paid the sum of:

2015-2018 ASSESSMENT SERVICES - $40,000 PER YEAR

2-5-15

Jim Danielson
Member
Accurate Appraisal LLC

Date

1/26/15

Authorized Client Signature
Mayor City of Lake Geneva

Date

CITY OF LAKE GENEVA

REQUEST FOR PROPOSALS TO PROVIDE ASSESSMENT SERVICES

June 26, 2018

The City of Lake Geneva invites proposals to provide annual assessment services for the period of January 1, 2019 to December 31, 2021. The proposal should also include services to conduct revaluation during the three year period.

City Information:

The City of Lake Geneva (hereafter, referred to as "City") is located in Walworth County with a 2010 census population of 7,651.

The 2017 assessment included the following parcels:

• Residential	3,834
• Residential Improved	3,420
• Commercial Total	511
• Commercial Improved	417
• Agricultural	206
• Other Total	1
• Other improved	1
• Total Parcels	4,552
• Total Improved Parcels	3,838
• 2017 Assessment Ratio	.9804
• There is currently no TIF District	

Obligations of the City:

The City will perform limited services to assist the assessor including:

- Answer general correspondence concerning assessment related inquiries that City staff is capable of answering. Provide information as to how to contact the Assessor by mail, fax, e-mail or telephone. Provide updates of assessor data on the City web site.
- Provide copies of all building permits and commercial plans, previous assessment rolls and records as requested at no cost.
- Publish public notices at appropriate times during the assessment and revaluation process.
- Provide adequate office space for assessment personnel for office hours.

- Provide the name, address of the owner and the block and lot number, size or other identifying description of each parcel to be appraised.
- Maintain current City map including lot sizes, parcel numbers and addresses.
- Provide access to the office open during normal City Hall hours: 8:30 a.m. to 5:00 p.m.

Scope of Work – Assessment Services:

1. Assessor will perform all of the work required to properly and professionally assess the real and personal property of the City in accordance with applicable Wisconsin State Statutes.
2. Assessor will review and assess all properties that were under partial construction as of January 1st of the previous year.
3. Assess or will review and assess new construction as of January 1st of the current year.
4. Assessor will mail out state approved forms to all holders of personal property in the City, audit the returned forms and place the new values in the easement roll. Doomage assessments will be made on any personal property account that has not sent in a return.
5. Assessor will account for all buildings moved, destroyed or demolished.
6. Assessor will create new property record cards for all parcels created from parcel splits and new plats. All property record cards shall be updated as needed.
7. Assessor will correct legal descriptions as needed.
8. Assessor will record assessment data, prepare appointment mailers, stuff envelopes and mail notices and schedule and reschedule appointments as necessary.
9. Assessor will mail the notices of changed/increased assessments.
10. Assessor will be responsible for completing the real estate and personal property assessment rolls.
11. Assessor will stay informed about zoning changes, conditional use permits, and other municipal decisions that impact value. Assessor will also stay informed about court decisions, Department of Revenue advisories and other governmental decisions that impact value.
12. All data and programs will become the property of the municipality.
13. All office supplies, postage and other supplies necessary to perform the duties of the contract shall be borne by the Assessor.
14. Assessor will conduct Open Book sessions in accordance with Wisconsin State Statutes. Property owners will be given sufficient notice of changes in assessment and will be provided the opportunity to meet with the Assessor to discuss changes. The assessment roll will be available for public inspection prior to the Open Book session.
15. The Board of review will be conducted prior to June 30th except for the year of the Revaluation, or as approved by the City Administrator.
16. Assessor will attend the Board of Review meetings and testify under oath while defending the Assessor's valuation and work products. In the event of an appeal

to the courts, it is agreed that the Assessor will be available to furnish expert testimony in defense of any of the assessed values.

17. Assessor will be responsible for providing the Wisconsin Department of revenue with final reports and TIF report per DOR regulations.
18. Assessor will provide a local or toll-free number for City officials and residents to contact Assessor during regular business hours, Monday through Friday, and shall return calls within twenty-four (24) hours, 90% of the time.
19. Assessor will supply to the City a complete set of computer property assessment records that are compatible with the City's computer equipment and software. (Computer records should be updated within thirty (30) days of the final adjournment of the Board of review.
20. Assessor will attend staff training sessions on Customer Service standards.
21. Assessor will be available by phone to provide information to City staff as needed and return phone calls within twenty-four (24) hours, 90% of the time.
22. Assessor will also perform all other duties incidental to the normal duties of Assessor.

Scope of Work – Revaluation Services:

The Revaluation, if determined necessary by the City Council, is to be completed at a mutually agreed upon time during the three year period. The Assessor, having familiarized himself/herself with the local conditions affecting the cost of the work to be done, and the Standard Specifications for the Revaluation of all Real and Personal Property in the State of Wisconsin pursuant to Chapter 70, Wisconsin State Statutes, will perform everything required to be performed, and to complete in a professional manner, all the work required to be completed, to revalue all Real and Personal Property within the City in accordance with all the applicable Wisconsin State Statutes.

1. For the valuation of residential properties, the Assessor will use a Computer Assisted Appraisal System.
2. For the valuation of commercial properties, the Assessor will use a Computer Assisted Appraisal System.
3. For the valuation of personal property, the Assessor will follow the procedures outlined in Volume 1 of the Wisconsin Property Assessment Manual.
4. The Assessor will complete all revaluation work in a timely and professional manner in compliance with Wisconsin State Statutes and with Volume 1 of the Wisconsin Property Assessment Manual. The Assessor will complete a Market Update in line with current sales for all properties in the City.
5. The Assessor will reconcile existing property record card data with data maintained in the assessor's mass appraisal software program.
6. The Assessor will review all recent property sales, perform an outside inspection to verify property attributes, and take digital color photographs of all current sales.

7. The Assessor will perform sales analysis to determine value trends and help to build a valuation model specifically for the City.
8. The Assessor will apply new valuation model to exiting property record information to arrive at a new assessed value for all property in the City.
9. The Assessor will individually review each property to insure a fair and equitable assessment.
10. The Assessor will mail new notices of assessment along with a letter explanation to all property owners.
11. Prior to the Open Book hearing period, a time for public inspection of the proposed roll will be allowed. The Open Book period should be scheduled to comply with appropriate Statutes and ensure notice to affected properties.
12. The Assessor will hold a sufficient number of "Open Book" meetings with taxpayers allowing enough time for those taxpayers wishing to ask questions or provide evidence supporting a different value.
13. The Board of Review for the revaluation period will be scheduled at the mutual convenience of the Assessor, Board of Review and the City Clerk.
14. The Assessor will attend "Board of Review to provide testimony supporting the assessment.
15. The Assessor will defend assessed values should a taxpayer challenge their assessment after the Board of Review at no additional cost to the City.

General Quotation Requirements:

1. Proposals must include no more than twenty (20) pages, 8 ½ inches by 11 inches.
2. All quotations must identify the firm name, address and specific assessment services experience in Wisconsin. The proposals should also include the names, educational background and municipal assessment experience of the person or persons to be assigned as the City's point of contact for the work to be performed.
3. **Assessor should provide complete information regarding the below items:**

    a. Define an inspection and describe your procedures for administering inspections.
    b. Describe your approaches used in developing commercial valuations.
    c. Specifically, describe your methods for "discovering" personal property accounts.
    d. Describe the criteria you employ in determining which permits you inspect.
    e. Detail your procedures relative to those properties that are improved but unfinished as of the assessment date.

f. Describe the process you utilize to update annual assessments outside of the revaluation years.
g. When reviewing building permits, when do you feel it is necessary to conduct a physical inspection of the property in order to determine an updated value for the property which was issued a building permit?
h. In your estimation, what should be the percentage of assessment disputes considered by the Board of Review in a revaluation year?
i. During a revaluation year, what percentage of your firm's disputes is reduced prior to Board of Review?
j. What is your overall philosophy of being a municipal assessor?
k. How would you define good customer service?
l. Given the current economic problems, please describe your opinion on the need for a revaluation over the next three years for the City of Lake Geneva. What would be your recommendation if you were to be the City's assessor?

4. Assessor is to provide a list of municipal references for which the Assessor has provided assessment services and revaluation services. An explanation of how the Assessor would deliver the services requested and inclusion of a timetable for delivery and completion of the revaluation shall also be submitted.
5. A detailed resume of the person or persons to be assigned as the City's primary contact for work to be performed should be submitted.
6. All work shall be accomplished in accordance with the provisions of the State of Wisconsin and in full compliance with the rules and regulations promulgated by the Wisconsin Department of revenue.
7. The proposals should also identify any and all contractual requirements that the bidder has.
8. All personnel providing assessment service shall be currently certified in compliance with Wisconsin State Statutes and Administrative Rules of the Department of Revenue for the type of properties in the City of Lake Geneva.
9. Bidders are advised to carefully inspect the community, the entire records and facilities of the City of Lake Geneva and examine the above referenced specifications for the proposed work and judge for themselves the circumstances affecting the cost of the work or the time requirement for its completion. Failure to do so will not relieve the successful bidder of the obligation to furnish and perform the work, to carry out the provisions of the contract and to complete the contemplated work for consideration set forth in this RFP.
10. The successful bidder is not permitted to assign, subcontract or transfer the work of providing assessment services, without the prior written approval of the City.
11. Assessor shall maintain insurance coverage to protect against claims, demands, actions and causes of action, arising from any act or emission of

the Assessor, his/her agents and employees in the execution of the work. Certificates f insurance by a company authorized to transact business in the State of Wisconsin shall be supplied to the municipality. The City of Lake Geneva shall be named as an additional insured. Limits of liability shall not be less than:

Workers Compensation	Statutory
Bodily Injury	
Per Person	$1,000,000
Per Occurrence	$1,000,000
Property Damage – Each Occurrence	$ 500,000
Comprehensive Auto Liability Including Non-ownership Coverage	
Per Person	$1,000,000
Per Occurrence	$1,000,000
Property Damage	
Each Occurrence	$ 500,000

12. The proposals will be reviewed and awarded to the Assessor whose quote is the most responsive to the solicitation and is the most advantageous to the City of Lake Geneva, considering experience, knowledge, demonstration of a high level of accuracy in assessment work for municipal clients, high level of customer service to property owners as well as municipal clients and other factors. The conditions enumerated in this request for proposal will form the basis for the agreement which the City will enter into. The final agreement will be modified upon selection and will be subject to review and approval by the City Council.
13. Submit any additional information that is pertinent to the RFP.

Inquiries:

Inquiries about this RFP should be directed to:

Blaine D. Oborn, City Administrator
City of Lake Geneva
626 Geneva Street
Lake Geneva, WI 53147

Phone: 262-249-4098 Fax: 262-248-4715
E-mail:cityadmin@cityoflakegeneva.com

Submission Instructions:

The City reserves the right to request additional written or oral information to supplement all written statements of qualifications or proposals. Interviews and presentations to a review committee and/or City Council are anticipated and will be on an invitation basis.

Submit the original and (10) copies of the proposal to Blaine D. Oborn, City Administrator, City of Lake Geneva, 626 Geneva Street, Lake Geneva, WI 53147 no later than 4:00 PM on Monday July 30, 2018.

Right to Reject:

The City of Lake Geneva reserves the right to reject any and all proposals and statements of qualifications and accepts no responsibility for the cost of proposal preparation.

Agreement for Assessment Services

Prepared for:

City of Lake Geneva

By

Accurate Appraisal, LLC

Bid Contents

About Accurate Appraisal, LLC	3
Section I: Agreement for Services	4
Section II: Lake Geneva Information	8
Section III: Signature Page	9
Dollar Cost Breakdown	10
Invoice Agreement	10
Contact Information	11
Assessor Resume	12
Client List	13

Accurate Appraisal, LLC

Owners:	Lee De Groot & Jim Danielson
Mailing Address:	PO Box 415 Menasha, WI 54952-0415
E-Mail Address:	leed@accurateassessor.com jimd@accurateassessor.com
Telephone: **Fax numbers:**	920-749-8098 920-749-8099

I, Lee De Groot, and I, Jim Danielson have the authority to commit our firm to the terms proposed.

Business Philosophy

In an effort to deliver a high level of service to our clients, Accurate has created an operational philosophy that ensures that our clients are the focus of everything we do. We inform municipalities and educate property owners by delivering the most reliable and accurate property tax assessment process, so that all constituents feel like they have been treated fairly and equitably. Our process values your assessments.

Basic Qualifications and Experience

a) We are a statewide assessing firm that is the statutory assessor for 98 municipalities (list and contact information attached). We started our business in the fall of 2000 and now we have 28 full-time employees at Accurate Appraisal LLC – 1 State Certified Level 3, 7 of which are Level 2, 11 are Level 1 and 4 have the Technician certification. We will have specific contacts for your account to allow for seamless transition.

b) The Account Manager for the City of Lake Geneva is Addie Ebert, supported by her team.

c) Resume for Addie Ebert, Assessor 3, is enclosed.

Our Proposed Rates

a) Our rate is an all-inclusive annual flat rate

AGREEMENT FOR SERVICES

Section I

This agreement made this _____ day of _____ 2018 by and between the City of Lake Geneva, Walworth County, Wisconsin, hereinafter referred to as "Client",

AND

ACCURATE APPRAISAL, LLC, PO BOX 415, MENASHA, WI 54952, hereinafter referred to as "Accurate".

SCOPE OF SERVICES

Accurate shall provide the Client with a Blended contract for assessment services by Wisconsin Department of Revenue Certified Personnel for the years of 2019 - 2021 assessment years, which includes the following:

1. Accurate shall update and maintain 100% real property assessment records for the Client. Said service shall include all assessing services so as to comply with all applicable Wisconsin statutes, codes, rules, and/or regulations, including the assessment of all new construction, remodeling, additions and changes relating to improvements removed for any reason such as fire, demolition, etc. through building permits. Accurate shall reapportion value brought about through property splits.

2. Accurate shall prepare and mail personal property blotters from a list supplied by the Client of the accounts to be assessed. Accurate will analyze returned personal property blotters from the merchants in order to establish the proper assessment.

3. Accurate shall, without additional expense to the Client, attend Open Book and all Board of Review meetings and shall be responsible for defending all assessments through the litigation process. The Open Book meetings shall be conducted as needed. The meetings shall be scheduled by Accurate with the Clerk. The Open Book meetings shall be completed each year no later than the Board of Review Completion date specified in Section III of this agreement.

4. Accurate shall enter real estate and personal property assessments in the current assessment roll so that it may be submitted to the Board of Review.

5. Accurate shall retain the right to employ additional certified personnel at Accurate's expense as deemed necessary to complete the assessment roll in a timely manner. Responsibility for the content and accuracy of the assessment roll regardless of the use of other personnel shall, however, rest with Accurate.

6. The Client's responsibilities will be to supply Accurate with adequate office space in City Hall. Items to be mailed such as, but not limited to, assessor's final report and personal property blotters will be the responsibility of Accurate.

7. The Client will hold harmless Accurate from third party claims and liabilities due to the assessment of property except claims or liabilities, which result from the intentional or negligent acts or omissions of Accurate, its employees, agents and representatives, shall be the responsibility of Accurate.

8. This agreement between the Client and Accurate shall be for the assessment years beginning January 1st, 2019 and ending December 31st, 2021. It is expected the work will commence with the mailing of personal property blotters and be completed after the final adjournment of the Board of Review and any necessary follow up questions and/or work, including appeals of Board of Review decisions along with all required ongoing assessment maintenance services through the agreement end date.

9. Each year, Accurate shall submit equal installments/invoices based upon a percentage of work completed in accordance with the Invoice Agreement provided in Section III. The Client reserves the right to retain a 10% holdback pending completion of all terms and conditions of the contract.

10. Accurate shall provide advice and opinion for assessment matters and will defend values through the appeal process beyond the Open Book and Board of Review for the annual fee listed in this contract, including attending, and testifying at mediations, depositions, and court hearings.

11. Accurate shall complete its Open Book hearings under this agreement no later than the Board of Review Completion date, specified in Section III of this agreement, except for unforeseen delays beyond the control of the Client or Accurate. Accurate may request a thirty-day extension to the contract upon written agreement with the Client.

12. Accurate shall maintain full insurance coverage to protect and hold harmless the Client. Limits of liability shall not be less than the amounts listed below in this contract:

INSURANCE COVERAGE

General Liability	
General Aggregate	$ 4,000,000
Each Occurrence	$ 2,000,000
Personal & Adv Injury	$ 2,000,000
Products-Comp/Op Agg	$ 4,000,000
Fire Damage	$ 300,000
Medical Expense	$ 10,000

13. Accurate shall consider the cost approach, market approach, and income approach in the valuation of all land and improvements where applicable.

14. Accurate shall use Computer Assisted Mass Appraisal (CAMA) software to accurately provide the Client with records of the maintenance and revaluation. For both residential and commercial valuation, Accurate owned CAMA system will be utilized following market data, Volume II of the Assessor manual and Marshall & Swift cost tables. The yearly maintenance fee associated with the use of the CAMA system will be at no additional expense to the Client. The data will be available to the public on accurateassessor.com; building data and appointment scheduling at no additional expense to the Client. Client shall be the owner of all data collected under this agreement and stored in the CAMA. Should this agreement be terminated or allowed to expire, Accurate shall then supply all assessment data to the Client in a format acceptable to the Client at no additional cost and without delay.

15. Photographs of all improved parcels will be taken digitally at no additional expense to the Client.

16. All expenses incurred by Accurate during the contract such as postage, phone calls, etc., will be at no additional expense to the Client.

17. Accurate will promote understanding of the assessment process with taxpayers and the Client. The Client and Accurate shall work to maintain good public relations throughout the assessment program.

18. All assessment files and records created and data collected by Accurate shall remain the property of the Client. Records shall not be removed from Client premises without the permission of the Client.

19. Client or Accurate may terminate this Agreement by delivering written notice to the other party by providing a 60-day written notice. Notice to the Client shall be provided to the City Clerk, City of Lake Geneva, 626 Geneva St, Lake Geneva, Wisconsin 53147. Notice to Accurate shall be provided to Lee De Groot.

    Termination will not relieve any part of any obligation incurred or deprive any part of benefits accrued prior to the termination date. Within 15 days of the date of termination, Accurate shall provide any documents or information related to the services provided under this agreement to Client.

20. If there are services outside the scope of this contract, the hourly rate for those additional services would be $75 per hour.

21. Tax Exempt Properties – We have vast experience with a wide variety of tax exempt properties throughout our 98 municipalities. Some unique examples include figuring out the exempt acreage limitation for Saint Norbert College in the City of DePere and the exempt versus assessable nature to the hospital campus in the City of Portage.

22. We believe the accuracy of our work speaks in servicing 98 municipalities throughout the state of Wisconsin. We have a 95% retention rate which displays our accuracy and effectiveness. We believe in communication and education as the foundation of a successful assessment program – this foundation has been a proven success since 2000.

23. Conflict Resolution – Accurate prides itself in the omnipresent foundation of effective communication and education to solve a wide array of conflicts. Our profession is unique in the fact that the majority of constituents that contact us do so with a negative perception. Our job is to not only assign assessed values but more importantly to educate and communicate what happened and why it happened. At the end of the process, our main goal is to have all taxpayers feel as though they have been treated fairly and equitably and to believe they are paying their fair share of property taxes. We have been successful with conflicts from large to small – from assessing 18 different Walgreens to small mobile homes – our foundation remains constant. We treat all taxpayers the same – fairly and equitably.

Section II

Parcel Totals: City of Lake Geneva

For Reference Only (Subject to Change)

Parcel Type	Count
Commercial Total	511
Commercial Improved	417
Residential Total	3834
Residential Improved	3420
Agricultural	206
Other	1
Other Improved	1
Total Parcels	**4552**
Total Improved Parcels	**3838**
Assessment Ratio	**98.04**

Section III

Agreement for Assessment Services

Provided by Accurate Appraisal, LLC

For

City of Lake Geneva, Walworth County for the assessment years 2019 – 2021
Dated this _____ day of ____ 2018.

Fee for services rendered:

Accurate shall be paid the sum of:

Full Value Program
For $123,000 3 Year Total

Revaluation Services to be completed by August 31st of each year

_____ _____
Jim Danielson, Member Date
Accurate Appraisal, LLC

Authorized Client Signatures:

_____ _____
Date

_____ _____
Date

Dollar Cost Breakdown

	Option A Blend Market Reval / Maintenance	Option B Full Value Program
Year 1 – 2019	$33,000	$41,000
Year 2 – 2020	$33,000	$41,000
Year 3 – 2021	$33,000	$41,000
Internet Access to data	Included	Included
Photographs of Improved Parcels	Included	Included
Expenses for Mailings, Certified Letters, Final Reports, and Blotters	Included	Included
Open Books and Board of Review	Included	Included
Term of Contract	**3 Years**	**3 Years**
Contract Total Cost	**$99,000**	**$123,000**

Recommend Full Value Program

Invoice Agreement

The table below outlines the invoicing of the contract throughout the contract year. Accurate Appraisal, LLC agrees to invoice monthly for the Client. In addition, per the contract agreement 10% of the contract will be retained by the Client until all work is completed. This 10% retention will be applied to the first invoice received.

Accurate Appraisal's Contact Information for Residents

1. Telephone Numbers
- 920-749-8098
- 800-770-3927

2. Fax Number
   - 920-749-8099

3. E-Mail Address
   - info@accurateassessor.com

4. Mailing Address
   - PO Box 415, Menasha, WI 54952
   - 1428 Midway Rd., Menasha, WI 54952

5. Website
   - www.accurateassessor.com

Addie Ebert

Account Manager

Accurate Appraisal LLC, Appleton, WI.

Assessor 3 (June 2012 – Present)

Personal Property Director (August 2006-October 2015)

- Largest Current Projects: City of Beaver Dam, City of Portage, City of Lake Geneva, City of Stoughton, City of Glendale, City of Brodhead, City of Brillion, City of Chilton, City of Jefferson, City of Elkhorn, City of Monona, City of Edgerton, City of Mosinee, City of Milton, City of Lodi, City of De Pere, City of Lancaster, City of Prescott, Village of Saukville, Village of Fontana, Village of Brown Deer, Village of Bayside, Village of Hartland, Village of Kimberly, Village of Belgium, Village of Mount Horeb, Village of Cambridge, Village of Sullivan, Village of Pardeeville, Village of Cambria, Village of Oregon, Village of Blue Mounds, Village of Cleveland, Village of Combined Locks, Village of Friesland, Village of Poynette, Village of Walworth, City of Manitowoc

- Company is Statutory Assessor for 98 municipalities statewide.
- Commercial valuing
- Residential valuing.
- Personal Property valuing
- Open Book and Board of Review Sessions.
- Experienced in GVS, Prolorem, BSA and PC Market Drive software.

Education

University of Wisconsin –Oshkosh,
Communications with an emphasis in Business

Assessor Certification

State of Wisconsin Certified Level 3 Assessor #W158428CA.

Accurate Appraisal Client Listing

MUNICIPALITY	TYPE	JOB TYPE	COUNTY	ACQUIRED	CONTACT	PHONE #
Manitowoc	City	MAINTENANCE	Manitowoc	2017	Nic Sparacio	920-686-6931
De Pere	City	MARKET REVALUATION	Brown	2005	Dave Hongisto	920-339-4053
Seymour	City	MARKET REVALUATION	Outagamie	2006	Susan Garsow	920-833-2209
Brillion	City	MAINTENANCE	Calumet	2002	Lori Gosz	920-756-2250
Chilton	City	MAINTENANCE	Calumet	2002	Helen Schmidlkofer	920-849-2451
Lodi	City	MAINTENANCE	Columbia	2005	Kathy Clark	608-592-3247
Portage	City	FULL VALUE MAINTENANCE	Columbia	2001	Marie Moe	608-742-2176
Prairie du Chien	City	MAINTENANCE	Crawford	2012	Barb Elvert	608-326-6406
Monona	City	FULL VALUE MAINTENANCE	Dane	2005	Joan Andrusz	608-222-2525
Stoughton	City	FULL VALUE MAINTENANCE	Dane	2002	Lana Kropf	608-646-0423
Edgerton	City	FULL VALUE MAINTENANCE	Dane/Rock	2007	Cindy Hegglund	608-884-3341
Beaver Dam	City	FULL VALUE MAINTENANCE	Dodge	2001	John Somers	920-887-4600
Lancaster	City	MAINTENANCE	Grant	2009	Dave Kurihara	608-723-4246
Platteville	City	MAINTENANCE	Grant	2012	Jan Martin	608-348-1821
Brodhead	City	MAINTENANCE	Green/Rock	2009	Teresa Withee	608-897-4018
Jefferson	City	FULL VALUE MAINTENANCE	Jefferson	2006	Tanya Stewart	920-674-7700
Whitewater	City	FULL VALUE MAINTENANCE	Jefferson/Walworth	2008	Michele Smith	262-473-0500
Cudahy	City	FULL VALUE MAINTENANCE	Milwaukee	2015	Dennis Broderick	414-769-2204
Glendale	City	MARKET REVALUTION	Milwaukee	2009	John Fuchs	414-257-1800
Prescott	City	FULL REVALUATION	Pierce	2009	Jayne Brand	715-262-5544
Burlington	City	FULL VALUE MAINTENANCE	Racine / Walworth	2012	Diahnn Halbach	262-342-1171
Milton	City	FULL VALUE MAINTENANCE	Rock	2004	Elena Hilby	608-868-6900
Elkhorn	City	FULL VALUE MAINTENANCE	Walworth	2001	Sam Tapson	262-723-2219
Lake Geneva	City	FULL VALUE MAINTENANCE	Walworth	2005	Dennis Jordan	262-248-3673
Hartford	City	FULL VALUE MAINTENANCE	Washington	2011	Lori Hetzel	262-673-8201
Angelica	Town	MAINTENANCE	Shawano	2008	Janet Powers	920-822-5554
Green Valley	Town	MAINTENANCE	Shawano	2006	Janalee Jenerou	715-745-2699
Wescott	Town	MAINTENANCE	Shawano	2009	Angela Vreeke	715-526-9755
Bovina	Town	MAINTENANCE	Outagamie	2011	Chuck Pluger	920-986-3224
Buchanan	Town	MAINTENANCE	Outagamie	2009	Joel Gregozeski	920-734-8599
Dale	Town	MAINTENANCE	Outagamie	2007	Jennifer DeZeeuw	920-779-4609
Harrison	Town	MAINTENANCE	Calumet	2007	Travis Parish	920-989-1062
Caledonia	Town	MAINTENANCE	Columbia	2009	Stephanie Brensike	608-742-4801
Courtland	Town	MAINTENANCE	Columbia	2007	Kate Raley	920-992-6585
Dekorra	Town	MAINTENANCE	Columbia	2009	Vicki Auck	608-635-2014
Lodi	Town	MAINTENANCE	Columbia	2009	April Goeske	608-592-4868
Randolph	Town	MAINTENANCE	Columbia	2006	Rod Kok	920-348-5597
Albion	Town	MAINTENANCE	Dane	2009	Julie Hanewall	608-884-8974
Berry	Town	MAINTENANCE	Dane	2003	Brenda Kahl	608-767-4152
Blooming Grove	Town	MAINTENANCE	Dane	2003	Mike Wolf	608-223-1104
Blue Mounds	Town	MAINTENANCE	Dane	2011	Helen Kahl	608-437-8722
Burke	Town	MAINTENANCE	Dane	2013	Brenda Ayers	608-825-8420
Cross Plains	Town	MAINTENANCE	Dane	2008	Ann Herger	608-798-0189
Deerfield	Town	MAINTENANCE	Dane	2007	Kim Grob	608-764-2608
Madison	Town	FULL VALUE MAINTENANCE	Dane	2008	Renee Schwass	608-210-7260
Perry	Town	MAINTENANCE	Dane	2006	Mary Price	608-832-6877
Pleasant Springs	Town	FULL VALUE MAINTENANCE	Dane	2002	Cassandra Suettinger	608-873-3063
Primrose	Town	MAINTENANCE	Dane	2012	Ruth Hansen	608-832-8056
Fox Lake	Town	MAINTENANCE	Dodge	2006	Mason Zantow	920-928-3573
Eldorado	Town	MARKET REVALUATION	Fond Du Lac	2010	Lori Linger	920-872-5071
Upham	Town	MAINTENANCE	Langlade	2002	Leah Antoniewicz	715-275-4229
Marathon	Town	MAINTENANCE	Marathon	2001	Kelley Blume	715-443-3082
Menominee	Town	MAINTENANCE	Menominee	2009	Ruth Waupoose	715-799-3311
Pine Lake	Town	MAINTENANCE	Oneida	2006	Cindy Skinner	715-362-6071
Beloit	Town	MAINTENANCE	Rock	2004	Karry Devault	608-364-2980
Fulton	Town	MAINTENANCE	Rock	2006	Connie Zimmerman	608-868-4103
Rock	Town	MAINTENANCE	Rock	2009	Deb Bennett	608-362-0598

Union	Town	MAINTENANCE	Rock	2005	Bridgit Larsen	608-882-5323
Sheboygan Falls	Town	MAINTENANCE	Sheboygan	2009	Jenny Meyer	920-467-1922
Darien	Town	MAINTENANCE	Walworth	2009	Marilyn Larson	262-882-3393
Delavan	Town	MARKET REVALUATION	Walworth	2012	John Olson	262-728-3471
Geneva	Town	MAINTENANCE	Walworth	2009	Debra Kirch	262-248-8497
Richmond	Town	MAINTENANCE	Walworth	2006	Barb Ceas	608-883-2017
Spring Prairie	Town	FULL REVALUATION	Walworth	2009	Debbie Collins	262-642-7477
Sugar Creek	Town	MAINTENANCE	Walworth	2002	Diane Boyd	262-742-3383
Dayton	Town	MAINTENANCE	Waupaca	2015	Judy Suhs	715-258-0930
Rose	Town	MAINTENANCE	Waushara	2005	Lois Kolka	920-622-3765
Fox Crossing	Village	FULL REVALUATION	Winnebago	2015	Karen Backman	920-720-7149
Combined Locks	Village	MARKET REVALUATION	Outagamie	2006	Racquel Giese	920-788-7740
Kimberly	Village	MAINTENANCE	Outagamie	2008	Adam Hammatt	920-788-7500
Harrison	Village	MAINTENANCE	Calumet	2013	Travis Parish	920-989-1062
Cambria	Village	FULL REVALUATION	Columbia	2002	Lois Frank	920-348-5443
Friesland	Village	MAINTENANCE	Columbia	2006	Marcia Dykstra	920-348-5156
Pardeeville	Village	MAINTENANCE	Columbia	2002	Brandon Bledsoe	608-429-3121
Poynette	Village	MAINTENANCE	Columbia	2006	Sue Kilen	608-635-2122
Blue Mounds	Village	MAINTENANCE	Dane	2009	Mary Jo Michek	608-437-5197
McFarland	Village	FULL VALUE MAINTENANCE	Dane	2009	Tracey Berman	608-838-3153
Mount Horeb	Village	MAINTENANCE	Dane	2007	Cheryl Sutter	608-437-6884
Oregon	Village	FULL VALUE MAINTENANCE	Dane	2004	Peggy Haag	608-835-3118
Cambridge	Village	MAINTENANCE	Dane/Jefferson	2001	Lisa Moen	608-423-3712
Iron Ridge	Village	MAINTENANCE	Dodge	2010	Arlette Lindert	920-387-3975
Sullivan	Village	MAINTENANCE	Jefferson	2002	Heather Rupnow	262-593-2388
Twin Lakes	Village	MARKET REVALUATION	Kenosha	2014	Jennifer Frederick	262-877-2858
Cleveland	Village	MAINTENANCE	Manitowoc	2006	Stacy Grunwald	920-693-8181
Brown Deer	Village	MAINTENANCE	Milwaukee	2016	Jill Kenda-Lubetski	414-371-3050
Shorewood	Village	FULL VALUE MAINTENANCE	Milwaukee	2014	Chris Swartz	414-847-2701
Bayside	Village	FULL VALUE MAINTENANCE	Milwaukee/Ozaukee	2006	Lynn Galyardt	414-351-8812
Saukville	Village	MARKET REVALUATION	Ozaukee	2006	Dawn Wagner	262-284-9423
Footville	Village	MAINTENANCE	Rock	2016	Jennifer Becker	608-876-6116
Prairie du Sac	Village	MAINTENANCE	Sauk	2016	Niki Conway	608-643-2421
West Baraboo	Village	MAINTENANCE	Sauk	2015	Kathy Goerks	608-356-2516
Fontana	Village	MAINTENANCE	Walworth	2005	Dennis Martin	262-275-6136
Walworth	Village	MAINTENANCE	Walworth	2007	Donna Schut	262-275-2127
Hartland	Village	MAINTENANCE	Waukesha	2007	Connie Casper	262-367-2714

Associated Appraisal Consultants, Inc.

Appleton ■ Hurley ■ Lake Geneva

Real Estate

CITY OF LAKE GENEVA

Walworth County

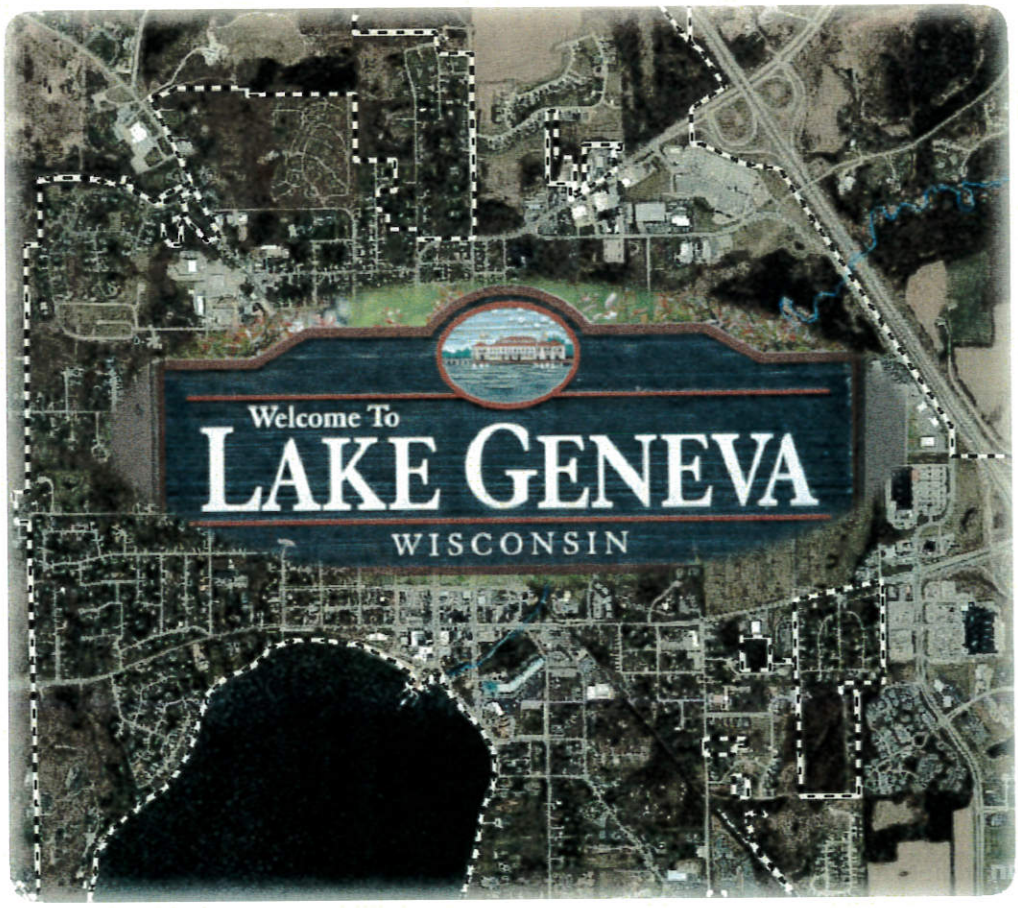

Proposal for Annual Assessment Services 2019 – 2021

Associated Appraisal Consultants, Inc.

Appleton ■ Hurley ■ Lake Geneva

Real Estate

July 27, 2018

Lana Kropf
City Clerk
City of Lake Geneva, WI

Dear Ms Krofp:

I am pleased to provide the City of Lake Geneva with a proposal for assessment services with our firm. I would like to take this opportunity to share with you some background about Associated Appraisal Consultants, Inc.

Associated Appraisal Consultants, Inc. has been in the mass appraisal business since 1959. Our primary focus is municipal assessment through annual maintenance and revaluation programs. We currently serve many municipalities with a diverse variety of property types, ranging from the mansions of Lake Geneva to the unique properties of Wisconsin Dells as well as Lake Superior communities and everything in between.

Unparalleled service is our strength. While our assessors are in the field, our administrative staff is in the office, Monday through Friday, to assist our clients, property owners, and businesses.

We provide an optional service to our clients to have their municipal assessment records posted on our website. The website offers easy-to-use search criteria and shows land and improvement data, including digital photos of all properties within the municipality. Please visit our website at **www.apraz.com** and click on "Property Search".

Our image also sets us apart from other assessment firms. When fieldwork begins, your residents can readily identify the Associated Appraisal Consultants team by our fleet of red trucks clearly displaying our company name and logo. In addition, field appraisers wear company clothing and carry photo ID tags and letters of introduction from the Municipality.

Associated Appraisal Consultants, Inc. uses cutting-edge computer aided appraisal software to create modern computerized assessment records. Our records include digital photographs, computerized sketches of buildings, a map indicating location of property, sales data, permitting information and all owner correspondence. We are a fully computerized and networked organization.

This is our business. We are proud of the reputation we have in the industry, from both our clients and state equalization officials. We put our best foot forward with every opportunity.

Please consider working with us. We welcome with great enthusiasm the prospect of working for you!

Respectfully,

Mark Brown
President

1314 W. College Ave. ■ P.O. Box 2111 ■ Appleton, WI 54912-2111 ■ (920) 749-1995 ■ Fax: (920) 731-4158

Mission Statement

Our Mission....

To provide our municipal clients the highest standard of assessing services. We do so by following sound assessing methodology, developing municipal equity without bias and providing a professional, courteous staff.

Company Overview

- Associated Appraisal has been in the mass appraisal business since 1959. Our primary focus is municipal assessment through maintenance and revaluation programs. Our client base is divided between providing services directly to municipalities by acting as the statutory assessor or supporting the local municipal assessor.

- With over 59 years of experience, Associated Appraisal has provided consulting/assessment services throughout Wisconsin. We have had the opportunity to reassess/revaluate municipalities that have increased or decreased in value. With the diversity of our client base ranging from the shores of Lake Geneva to the backwoods of northern Wisconsin, we are aware of the many complexities of assessment practices. This diversity and experience is what gives Associated Appraisal the leading edge.

- Associated Appraisal Consultants, Inc. serves over 250 municipalities throughout the State of Wisconsin containing a total inventory of approximately 700,000 real estate parcels.

- Associated Appraisal maintains a professional image in the field, at the Open Book, and Board of Review hearings. For identification in the field, our staff members carry letters of introduction, wear Associated Appraisal company ID tags and apparel, and drive red company trucks clearly identified as Associated Appraisal fleet vehicles.

- When you call our office, Monday through Friday, you will be greeted by a friendly voice ready to direct your inquiry to an appropriate team member who will be willingly to assist you. Our website offers access to municipal assessment records twenty-four (24) hours per day.

- Each municipal client has a primary point of contact, the project technician, providing a consistent relationship with The Associated Appraisal team. Our corporate office is in Appleton with satellite offices in Lake Geneva (Southern) and Hurley (Northern).

- Associated Appraisal Consultants, Inc., takes great satisfaction is our company's history with the capacity to perform all the necessary administrative and technical functions that municipalities come to expect.

- Assessment documentation is what sets Associated Appraisal above the rest. For property owners demanding answers to assessment methodology, we document all aspects of a maintenance or revaluation project. The property record includes land data, improvement data, sales data, improvement pictures, appropriate appraisal reports, property maps and any other documentation needed to defend values. A master Maintenance/Revaluation Report Book is also prepared that is frequently used by the Board of Review to aid in understanding the methodology. Included are complete reports for assessment levels, sales information and pictures of sale properties, all database data for valuation tables, a detailed sales analysis as well as other reports needed to support values.

- Associated Appraisal Consultants, Inc. adheres to the Wisconsin Property Assessment Manual and the timelines that were developed by the Wisconsin Department of Revenue.

- With our level of experience, our goals are very clear. We are in the assessment business, full time, providing our clients with professional and reliable service. Our client base over the years has provided us with many diverse appraisal opportunities giving us the experience to confidently accept any job and meet all expectations of our clients.

Assessor should provide complete information regarding the below items:

A. Define an inspection and describe your procedures for administering inspections.

Inspections involve updating/reviewing the property records for any physical changes made to a property that causes a change in market value. Associated Appraisal will physically visit each property and at a minimum perform an exterior inspection. Interior inspections occur when the property does not match the property record card, previous documentation or as the assessor deems necessary. If a property owner was not available at the time of visit we would leave a door hanger with instructions on how to schedule an inspection.

The following inspection cycle is completed by Associated Appraisal annually:

*Conduct **on-site** inspections for the following:*

- *New construction*
- *Significant remodeling (requiring a permit), or other major building condition changes*
- *Demolition or damaged due to fire etc.*
- *Annexed properties*
- *Combining or splitting of parcels*
- *Change in exemption status*
- *Improved properties under construction over a period of years shall be re-inspected.*
- *Sales properties*
- *Legal description changes as necessary*
- *Zoning changes shall be reviewed and inspected as necessary to ensure a fair assessment.*
- *Requests for review by property owners*

B. Describe your approaches used in developing commercial valuations.

Commercial valuations are completed using the three approaches to value: sales comparison approach, cost approach and income approach.

- ***Sales Comparison Approach**. Associated will collect, compile and analyze all available sales data for the Municipality to become familiar with the prevailing market conditions and activity. A detailed analysis of sales data will be prepared, including a picture book of recent commercial sales. Vacant land sales will also be compiled and analyzed. In valuing property by the sales comparison approach, subject properties will be appraised through a detailed comparison to similar properties that have recently sold, making careful consideration of similarities and differences between the subject and comparable sale properties.*

- ***Cost Approach**. The cost approach to value will be considered for all taxable improved property. Replacement costs for commercial improvements will be calculated using Marshall & Swift valuation service (now Core Logic). All accrued depreciation, including physical deterioration, functional obsolescence, and economic obsolescence will be accurately documented and deducted from current replacement costs.*

- ***Income Approach**. Consideration of the income approach to value will be made when the income or potential income generated by the real estate is deemed likely to affect the property's resale value. Data to be analyzed will include economic rents, typical vacancy rates and typical operation expense ratios. In the valuation of property by the income approach, adequate records will be prepared, showing a reconstruction of income and expenses, as well as all calculations used to arrive at market value, including formulas and capitalization rates as appropriate to the type of property being appraised.*

C. Specifically, describe your methods for "discovering" personal property accounts.

Discovering personal property accounts requires a multi-technique approach.

- *Personal property is a self-reporting system so there is a certain level of dependence on new businesses to report.*
- *Municipalities often keep track of any new businesses through occupancy permits or other similar documents such as permits for buildouts etc.*
- *Associated field staff actively look for new businesses as they perform appraisals.*
- *Associated depends on reports generated by the leasing companies. These reports provide data on what companies are leasing. Many new companies show up on the leasing reports.*
- *Assistance from the City as a crosscheck of new businesses, closures and changes in valuation are helpful in the discovery of omissions and additions.*
- *Our CAMA system has an audit report, notifying us of any real estate parcels not having a personal property account. Using that report we would verify on-site or by other means if a new account should be added for that location.*

D. Describe the criteria you employ in determining which permits you inspect.

See provided list under question A and further detailed in the provided Agreement for Maintenance Assessment Services, page 1.

E. Detail your procedures relative to those properties that are improved but unfinished as of the assessment date.

Partial assessments are placed on the assessment roll based on the percentage of completion as of the effective date of assessment being January 1st. Each year we will revisit any partial construction projects and update the property record card and valuation as needed until completion. For example, as of January 1, the property is 40% completed. The property will be visited the following year and assessed for the full value if it is completed.

F. Describe the process you utilize to update annual assessments outside of the revaluation years.

The maintenance assessment cycle is the minimum annual requirement of assessors to maintain the assessment roll from year to year. Assessments from the previous year are updated to reflect changes that effect market value, then are adjusted to the current level of assessment as needed. See provided list under question A and further detailed in the provided Agreement for Maintenance Assessment Services, page 1.

G. When reviewing building permits, when do you feel it is necessary to conduct a physical inspection of the property in order to determine an updated value for the property which was issued a building permit?

See provided list under question A and further detailed in the provided Agreement for Maintenance Assessment Services, page 1.

H. In your estimation, what should be the percentage of assessment disputes considered by the Board of Review in a revaluation year?

The attendance at Board of Review really would depend on how long it has been between revaluation years and what appreciation or depreciation in market values has occurred over that timeframe. We typically expect about 1% of the improved parcel count appealing at BOR.

I. During a revaluation year, what percentage of your firm's disputes is reduced prior to Board of Review?

Most disputes are handled prior to BOR via the Open Book process and informal meetings with property owners. We provide detailed documentation to property owners during the open book review period to ensure transpancy in our valuations and appraisal methods used. Additionally, we take the time to listen and educate property owners on the assessment process and answer any questions they have which significantly reduces assessment appeals.

J. What is your overall philosophy of being a municipal assessor?

Our overall philosophy of being a municipal assessor is best summed up in our mission statement: To provide our municipal clients the highest standard of assessing services. We do so by following sound assessing methodology, developing municipal equity without bias and providing a professional, courteous staff.

K. How would you define good customer service?

Good customer service is the job of each person who represents Associated Appraisal Consultants, Inc. Each time someone calls our office during 8 am and 4 pm, a friendly voice answers ready to assist. We have 24-hour internet access for those who cannot contact us during normal business hours. We provide a project manager and project technician to each municipality to ensure a good working relationship is established with one point of contact. Finally, our field staff comes into the field with photo identification, letters of introduction on municipal letterhead and in full company issued clothing. Their vehicles are clearly marked with our information, their coats, shirts and hats have our logo on them; all ensuring we are easily identifiable.

L. Given the current economic problems, please describe your opinion on the need for a revaluation over the next three years for the City of Lake Geneva. What would be your recommendation if you were to be the City's assessor?

The job of the municipal assessor is to ensure property taxes are evenly distributed among its residents. If inequalities exist and one person is assessed higher than someone else in a property that is relatively equal in home and lot size, that person is paying more than their fair share of the tax burden. It is our job to then recommend a revaluation to bring each property in line with market value and re-establish equity between similar properties.

On the following page we have prepared a brief sales analysis showing the assessment performance of the City's residential class over the past five years. Based on the metrics displayed in that report compared to expected ratio standards by the Wisconsin Department of Revenue and International Association of Assessing Officers, it is clear the City's assessments are no longer equitable and that uniformity has gradually eroded.

The recent 2017 sales analysis column shows that property assessments are approximately 9% under their sales prices (median of 91.01%). High valued properties are consistently undervalued as compared to lower valued properties (PRD 1.05). However, the most alarming ratio statistics in this study are the COD and COC being 21.95 and 50.2. What those two statistics infer is that only 50.02% of the time assessment ratios have been within 21.95% of the median ratio. This indicates poor assessment performance and a need for a revaluation.

Welcome To
LAKE GENEVA
WISCONSIN

Residential Class	2013	2014	2015	2016	**2017**
Total Sales Transactions	114	112	161	134	**221**
Total Assessed Value	$21,901,000	$19,640,500	$40,491,300	$29,431,000	**$56,171,700**
Total Sales Value	$22,611,734	$22,194,365	$46,645,780	$31,475,258	**$64,922,640**
Aggregate Ratio	96.86	88.49	86.81	93.51	**86.52**
Mean Ratio	103.76	96.47	98.20	94.44	**90.93**
Median Ratio	96.39	92.97	96.00	95.76	**91.01**
Price Related Differential	1.07	1.09	1.13	1.01	**1.05**
Coefficient of Dispersion	22.67	18.44	17.52	13.58	**21.95**
Coefficient of Concentration (within 15% of the median)	61.4	61.6	55.9	68.7	**50.2**

A major objective of assessment/sales ratio studies is to determine the degree of assessment uniformity. This measure of assessment performance is gauged by looking at the level of assessment and the degree to which individual assessments differ from that level. The above ratio studies only include transactions of valid or arm's-length sales in accordance with the Wisconsin Property Assessment Manual. Sales data and statistics correspond to the calendar year of the sale as recorded via the Real Estate Transfer Return provided to the Assessors office. A series of ratios by itself does not tell much about assessment performance. A basic understanding of statistics is needed to successfully interpret the above ratios.

Definition of Statistical Terms

Aggregate ratio—As applied to real estate, the ratio of the total assessed value to the total selling price. Advantage is that it takes dollar values into account. Disadvantage is that it is sensitive to extreme ratios.

Mean ratio—A measure of central tendency equal to the sum of the values divided by the number. Also referred to as **arithmetic average** or **arithmetic mean**. Advantage is that it is easily calculated and understood. Disadvantage is that it is sensitive to extreme ratios.

Median ratio—A measure of central tendency equal to that point in a distribution above which 50% of the values fall and below which 50% of the values fall. The 50th percentile is the 2nd quartile. The median is the ratio in the middle. Advantage is that it is not sensitive to extreme ratios.

Price-related differential—As applied to real estate, an analytical measure of the vertical uniformity of values in a given distribution calculated by dividing the mean ratio by the aggregate ratio; a ratio of more than one being generally indicative of the relative undervaluation of high priced properties as compared to the less valuable properties, whereas a ratio of less than 1 would indicate the converse relationship. Price-related differentials above 1.03 tend to indicate assessment regressivity; price-related differentials below .98 tend to indicate assessment progressivity.

Coefficient of dispersion—As applied to an assessment-to-sale ratio distribution, is the average distance in percentage terms that individual ratios lie from the median ratio. A reasonable dispersion is 10% - 15%; good is under 10%. Big is bad.

Coefficient of Concentration—A single statistic expressed in percentage terms which tells how many ratios are within +/- 15% of the median ratio.

Prepared by Associated Appraisal Consultants, Inc.

Statement of Work

Compensation Proposal Summary for the City of Lake Geneva

Services Performed For:

City of Lake Geneva
Lana Kropf
City Clerk
626 Geneva Street
Lake Geneva, WI 53147

Associated Appraisal Consultants, Inc.
Appleton ■ Hurley ■ Lake Geneva

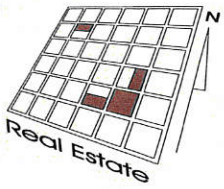

Fee Schedule

The figures below are based on 3 years of professional services. Optional add-on assessment services would be in addition to the price of annual Maintenance.

Contract Proposal	2019 Assessment Year	2020 Assessment Year	2021 Assessment Year
MAINTENANCE	$40,000	$40,000	$40,000
INTERIM MARKET UPDATE	-	+ $60,000	Optional Add-on Assessment Service

Out-of-Pocket Expenses / Invoice Procedures

MAINTENANCE: The compensation due the Assessor shall be paid in monthly installments throughout the 2019, 2020 and 2021 Maintenance assessment years.

REVALUATION: Payment shall be made on a monthly basis for services and expenses incurred during a Revaluation year. Monthly invoices shall reflect the percentage of work completed, less 5 percent retained by the Municipality until completion of the revaluation and final adjournment of the Board of Review. This monthly payment schedule would apply to the Interim Market Update assessment year.

- The Municipality shall not be billed for postage, mileage or supplies unless otherwise specified by contract.

OPTIONAL WEBSITE POSTING: The Municipality shall have the option to post their assessment data on our website for no additional charge.

Assessment Services Additional Information

The quoted price(s) for Maintenance and Revaluation services provided by Associated Appraisal Consultants, Inc. includes the following provisions unless otherwise specified by contract:

- Assessor will continue to incorporate the use of City staff to perform the tasks as outlined in the RFP.
- Meet or exceed all specific scope of work assessment services as outlined in the RFP.
- All-inclusive assessment service agreements, the Municipality shall not be billed for postage, mileage, or supplies.
- Associated Appraisal Consultants, Inc. shall use the Market Drive CAMA software for real estate, mobile homes and personal property valuation.
    - CAMA software will satisfy all requirements specified in the RFP under Computer Assisted Appraisal System. It is the most widely used assessment and revaluation software in the state of Wisconsin. A full list of features and specs is available upon request.
- All electronic assessment records shall be completed to include all building attribute data, including a digital copy of the primary sketch, and photos of all structures.
- All electronic assessment records shall be updated and maintained to include sales data, building permits, owner correspondence, and recent building permit data.
- Associated Appraisal Consultants, Inc. shall maintain insurance coverage to protect against claims, demands, actions and causes of action arising from any act, error or omission of the assessor, their agents and employees in the execution of work. The assessor shall be responsible for any and all of their agents and employees while performing acts under the terms of the contract. The City of Lake Geneva shall be listed as an additional insured, and a certificate of insurance will be provided to the City.

The above provisions shall assist the City in maintaining a complete and accessible database of electronic assessment records in a format that is both familiar to the City staff and useful to multiple departments within the City.

Associated Appraisal Consultants, Inc.

2018 Clients Over $700,000 in Equalized Value

Municipality	Annual Service	Parcels	Population	Equalized Value
Village of Germantown	Maintenance	8,429	19,749	$2,577,479,900
City of Neenah	Maintenance	9,642	25,871	$2,095,284,800
Town of Linn	Maintenance	3,183	2,391	$1,738,894,300
Village of Waunakee	Maintenance	5,247	12,901	$1,717,335,100
Village of Richfield	Full Value Maint.	5,872	11,458	$1,641,680,900
Village of Lake Delton	Maintenance	4,175	2,974	$1,484,758,700
City of Watertown	Maintenance	2,808	23,864	$1,394,071,000
Village of Sussex	Full Value Maint.	3,387	10,743	$1,324,729,900
Village of Fox Point	Maintenance	2,664	6,701	$1,129,369,900
City of Menasha	Maintenance	5,259	17,633	$1,117,040,500
Village of Deforest	Full Value Maint.	4,212	8,936	$1,059,843,200
Village of Pewaukee	Maintenance	2,945	8,138	$975,923,700
City of Port Washington	Maintenance	4,621	11,642	$974,672,000
City of River Falls	Maintenance	4,659	15,180	$965,444,900
Town of Liberty Grove	Full Value Maint.	4,627	1,776	$914,796,900
City of Fort Atkinson	Maintenance	4,600	12,355	$903,920,400
Town of Mukwonago	Maintenance	3,381	8,020	$894,793,900
City of Sturgeon Bay	Maintenance	4,619	9,202	$859,880,300
Village of Mukwonago	Maintenance	3,138	7,629	$839,258,300
Town of Westport	Maintenance	2,906	4,415	$812,925,400
Village of Little Chute	Maintenance	3,907	10,778	$771,569,100
Village of Somers	Maintenance	3,173	9,597	$770,605,900
Town of East Troy	Maintenance	2,578	4,282	$764,578,400
Town of Sheboygan	Maintenance	4,022	7,435	$756,257,700
Town of Dunn	Maintenance	2,956	5,152	$740,280,100
City of Plymouth	Maintenance	3,167	8,458	$735,830,400
Town of Gibraltar	Maintenance	3,153	1,018	$730,117,600
Town of Sevastopol	Maintenance	3,574	2,791	$716,397,100
City of Monroe	Full Value Maint.	4,213	10,768	$714,080,200
Village of Cottage Grove	Maintenance	2,530	7,172	$711,556,100
Village of Williams Bay	Maintenance	2,507	2,594	$707,391,600

*Complete client list available upon request.

Client References

Village of Richfield
Jim Healy
Village Administrator
4128 Hubertus Road
Richfield, WI 53033
262-628-2260 ext. 115

City of Reedsburg
Jacob Crosetto
Clerk/Treasurer
PO Box 490
Reedsburg, WI 53959-0490
608-768-3346

City of Wisconsin Dells
Nancy Holzem
Clerk/Admin Coordinator
PO Box 655
Wisconsin Dells, WI 53965
608-254-2012

City of Port Washington
Mark Grams
City Administrator
100 W. Grand Ave.
PO Box 307
262-284-5585

Village of Kohler
Laurie Lindow
Clerk/Treasurer
319 Highland Drive
Kohler, WI 53044
920-459-3873 ext. 106

City of Watertown
Elissa Meltesen
Clerk/Treasurer
PO Box 477
Watertown, WI 53094
920-262-4009

Village of Waunakee
Julee Helt
Clerk
PO Box 100
Waunakee, WI 53597
608-850-2827

Village of Mukwonago
Steven Braatz
Clerk/Treasurer
440 River Crest Court
Mukwonago, WI 53149
262-363-6420 ext. 2102

City of Neenah
Chris Haese
Dir. of Com. Dev. & Assessments
211 Walnut Street
Neenah, WI 54956
920-886-6125

Village of Johnson Creek
Heather Rupnow
Clerk/Treasurer
PO Box 238
Johnson Creek, WI 53038
920-699-2296

Village of Maple Bluff
Sarah Danz
Clerk/Treasurer
18 Oxford Place
Madison, WI 53074
608-244-3048

City of Menasha
Deborah Galeazzi
Clerk
100 Main Street, Suite 200
Menasha, WI 54952
920-967-3608

Village of Germantown
Kim Rath
Finance Director
N112 W17001 Mequon Road
Germantown, WI 53022
262-250-4700

Village of Lake Delton

Clerk/Treasurer
50 Wisconsin Dells Pkwy South
PO Box 87
Lake Delton, WI 53940-0087
608-254-2558

Additional references available upon request.

Statements from References

Linda D. Wait, Clerk/Treasurer
Town of Sevastopol

"The Town of Sevastopol is pleased to provide a letter of reference and recommendation regarding Associated Appraisal Consultants, Inc. of Appleton, Wisconsin.

We are a municipality in Door County, Wisconsin, with approximately 4,400 parcels and assessed valuation of over $718 million. Assessment classification include residential (with many shoreline parcels), commercial, agricultural, undeveloped, forest and personal property. The Town of Sevastopol has contracted with Associated Appraisal since 1989 to the present to provide professional assessment services, which also include filings with the Wisconsin Department of Revenue, annual assessment reports, attendance at Open Book and Board of Review hearings, and other assistance throughout the year as needed. Over the years, the staff at Associated Appraisal has always been pleasant and accommodating, offering a high level of professional service to Town officers and to our property owners. The assessors are knowledgeable and well informed as to real-estate values and transactions in our community and use of comparable properties.

If you have any questions or require additional information, please feel to contact our office."

Tim Popanda, Village Administrator
Village of Paddock Lake

Associated Appraisal Consultants, Inc. has been a valued provider of assessing services for the Village of Paddock Lake since 1996. We have relied on them for revaluation services and property maintenance to keep the municipality statutorily compliant. The appraisers are readily available for questions from village residents and village board members. They work diligently with property owners to resolve differences before the Board of Review and any cases that may come before the Board of Review are successfully defended. Please do not hesitate to contact us if you have any questions about working with Associated Appraisal Consultants, Inc.

Dale D. Darling, City Clerk/Treasurer
City of Wisconsin Dells

"We have used Associated Appraisal for about the last 14 years for both annual maintenance and 2 revaluations. They have provided the City good service during those years at a fair cost. We refer most calls relating to valuations from our property owners directly to them. They have an 800 number in which the property owners can contact them directly and receive a prompt response to their inquiry. Since the City is in four different counties Associated Appraisal deals with a variety of issues with a lot of commercial property owners. They have a good staff and do a nice job at Open book and Board of Review. Thus, for the City of Wisconsin Dells it has worked out well in having Associated Appraisal as our city Assessor."

Rebecca Houseman LeMire, Administrator/Clerk-Treasurer
Village of Darien

"The Village of Darien contracts with Associated Appraisal Consultants, Inc., to fulfill the statutory duties of the Assessor for the Village. Mr. Mack has demonstrated expertise within his field. He is willing and able to answer any questions that the Board of Review, The Village Board, or I may have regarding his company's services and the statutory obligations for each jurisdiction his represents. Because he represents many different municipalities in Wisconsin, Mr. Mack is able to offer advice and experience that a staff assessor may not have."

Patricia Huberty, City Clerk Treasurer
City of Plymouth

"On behalf of the City of Plymouth, I would like to take the opportunity to send this letter of appreciation and high recommendation regarding the assessing services the City has received since contracting with Associated Appraisal Consultants, Inc. almost one year ago. We ere in a very stressful situation with a previous assessor and your employees came on board and very quickly and very professionally got us back on track. Our Board of Review is completed for 2015 with no objections to be hear. Board Members were very impressed with the professionalism. We look forward in continuing this business relationship and would highly recommend Associated Appraisal Consultants, Inc. for assessment services."

Felicia Germain, Village Administrator/Clerk
Village of Somerset

"I would like to take the opportunity to send this letter of appreciation and high recommendation regarding the assessing services the Village has received since contracting with Associated Appraisal Consultants. I appreciated the respectful interactions they have with citizens' concerns. They take the time to offer a through explanation. I have enjoyed working with Associated Appraisal Consultants and highly recommend them for Assessment Services."

Marjorie Bielke, Clerk/Treasurer
Town of Calamus

"On behalf of the Town of Calamus, I would like to thank you and the representatives of your firm for the work you have performed for us over the past 12 years. As our assessor we appreciate your professional and courteous manner. You have dealt with concerns of our residents in a fair manner at the open book and your knowledge has proved valuable to us at BOR. We look forward to working with you in the future and would recommend Associated Appraisal Consultants to any municipality.

Larry Volz, Town Chairman
Town of Delton

The Town of Delton is pleased to provide a letter of reference and recommendation for Associated Appraisal Consultants, Inc. of Appleton, Wisconsin. Associated Appraisal has provided Municipal for 1,775 parcels to the Town of Delton since 2008. We have worked with several different staff members through the years and all of them have been very professional and pleasant to work with. We have never had any complaints about any of the staff from our Town residents. The Assessors are up-to-date on real-estate values, transactions in the area and comparable properties. They have always met all statutory and municipal deadlines for reports and hold Open Book and Board of Review in a timely manner. They have always made themselves available when we have questions throughout the year.
Our experience with Associated Appraisal has always been very positive and we high recommend them for your assessment services.

Very Truly Yours,
TOWN OF DELTON"

Michael Hawes, Village Administrator/Clerk-Treasurer
Village of Wind Point

This letter is to confirm our high level of satisfaction with the revaluation process this year with Gerad Gage as project manager. Gerad was very detail-oriented and responsive throughout the project. Our Village Board was impressed with his level of preparedness for Board of Review. We are pleased to have him as a project manager for the Village of Wind Point.

Barb Klumpyan, Town Clerk
Town of Osceola
On behalf of the Town of Osceola, I would like to thank you for the work you have done for our town. We have been very pleased with the service you have provided.

At the open book and board of review, your staff has been courteous and very knowledgeable. When the residents have concerns, your staff has dealt with them in a very professional manner. They have even driven to resident's homes and talked with them so they could explain where the assessment was coming from.

We look forward to working with you each year. We would recommend Associated Appraisal Consultants, Inc. for any municipality that is in need of assessment work. Thank you,"

Resume

Mark Brown - President

Associated Appraisal Consultants, Inc.
Appleton ■ Hurley ■ Lake Geneva

Objective

Assessor with vast experience performing reviews, inspections and appraisals of property using independent discretion and judgment within the guidelines set forth by statutory requirements and department policies and procedures. Experienced municipal Assessor, having successfully performed over 100 full-scale municipal revaluations, and successfully served as chief assessor for towns, villages and cities throughout the state of Wisconsin.

Certifications

- Assessor III Certification – WI60828CA
- Assessor II Certification – WI60828CA

Summary of Qualifications

- Fourteen years' experience in appraisal and assessment.
- Considerable ability to communicate complex information tactfully and effectively both orally and in writing with state regulatory agencies, county regulatory agencies, elected officials, municipal staff, and the general public.
- In-depth knowledge of accepted principals, methods and techniques of property appraisal including computerized assessment systems.
- Extensive knowledge of all laws and regulations pertinent to local tax assessments.
- Strong knowledge of real estate property values and land economics.
- Ability to accurately perform mathematical calculations, analyze data, and prepare reports.
- Experience working with a variety of mass appraisal computer systems, including Market Drive, Microsolve, GVS, MCost, Vision, Universe and others.
- Strong project management skills including the ability prioritize projects and to organize, plan and direct the work of staff.
- Ability to read and interpret a wide variety of legal documents.
- Successful experience in defending valuations at Open Book, Board of Review, Department of Revenue appeals and circuit court.

Professional Experience

Associated Appraisal Consultants, Inc., Appleton, Wisconsin

2014 - Present
President

2005 – 2014
Director of Project Management, Certified Assessor Level II & III

- Responsible for the management of the assessment staff to ensure revaluation projects are completed accurately and in a timely manner.
- Advise on the policy and methodology used to determine estimated fair market value and assign its proper classification in accordance with Wisconsin Statues.
- Advise on the proper methodology to appraise the value of agricultural, commercial, residential, and personal properties.
- Provide quality control and supervision of the final output and ensure that proper documentation and records are maintained.
- Research and keep current on issues and developments that impact the municipalities' assessment function.
- Direct reassessment and appraisal programs on all agricultural, commercial, residential, and personal properties within the municipalities' limits.
- Define and organize the procedure to reevaluate neighborhoods.
- Analyze property sales through the use of regression analysis.

1314 W. College Ave. ■ P.O. Box 2111 ■ Appleton, WI 54912-2111 ■ (920) 749-1995 ■ Fax: (920) 731-4158

- Analyze valuation data of commercial and residential properties.
- Verify sales and assessment ratio studies.
- Defend assessed values at Board of Review, 70.85 Appeals to the Wisconsin Department of Revenue, and Circuit Court.
- Works as part of the management team to efficiently operate the company.

2004 – 2005
Staff Appraiser

- Appraised all real property for accuracy of records, construction classification and computed appraisal of property.
- Recorded and updated property record cards by measuring and listing improved and vacant parcels.
- Gathered and verified assessment information.

Professional Memberships

- International Association of Assessing Officers – IAAO
- Wisconsin Association of Assessing Officers – WAAO
- State and Local Finance Roundtable Member
- WAAO Assessment Advisory Committee Member

Education

· St. Norbert College, De Pere, Wisconsin	Bachelor of Business Administration, 2004
· IAAO - GIS/CAMA	February 2017
· WPAM VOL II 2017 Updates	November 2017
· Land Classification	December 2016
· Commercial Cost Data Collection	November 2016
· Dark Stores: The Michigan and Indiana Experience	March 2016
· Project Management in Mass Appraisal	December 2015
· Equalization Sales Validation & Economics	March, 2014
· Real Estate Assessments	October, 2012
· Market Drive 2013 Overview & Sales	October, 2012
· Preparing & Filing MAR & TAR & Configuring Cost Models	October, 2012
· Mobile Home Municipal Permit Assessments & Personal	October, 2012
· Property Assessments	
· AAR Report	October, 2012
· Listing & Valuing Commercial Properties	October, 2012
· IAAO – Course 101 – Fundamentals of Real Property Appraisal	March, 2012
· IAAO Course 311 – Residential Modeling Concepts	March, 2012
· IAAO Course 300 - Fundamentals of Mass Appraisal	October, 2011
· IAAO Course 112 - Income Approach to Valuation	August, 2011
· DOR's USPAP Compliance & Reporting Standards for Assessors	June, 2011
· How to Value & Defend Triple Net Lease Properties	March, 2011
· Current Issues in Commercial Real Estate	March, 2011
· Market Analysis and Highest and Best Use	March, 2011
· 2010/2011 National USPAP Update	October, 2010
· USPAP 15 Hour National Course 2010-11	October, 2010
· Discounted Cash Flow & Band of Investment	June, 2010
· Analyzing Commercial Lease Clauses	March, 2010
· Distressed Property Considerations	March, 2010
· Appraising Apartments – 74.37 Appeals	September, 2009
· **Instructor** - Valuation of Large & Unique Buildings	September, 2009
· Reconstructing Income & Expense	September, 2009
· Preparing for a S. 70.85 Assessment Appeal	April, 2009
· Using the Latest Mapping & GIS Tech. For Appraisal Purposes	April, 2009
· Sales Validation with Foreclosure Issue Focus	March, 2009
· Wisconsin Tax Policy for Assessors	March, 2009
· ABCs of Environmental Contamination	December, 2008
· Board of Review: An Assessment Perspective	March, 2008
· Mega Dairy Farms	September, 2007
· Introduction to Subsidized Housing	September, 2007
· Assessing 101	April, 2005
· Correction of Assessment Errors-Statutory Procedures	April, 2005
· Appraising Convenience Stores	March, 2005

Resume

Dean Peters – Director of Project Management

Associated Appraisal Consultants, Inc.
Appleton ■ Hurley ■ Lake Geneva

Objective

A skilled and experienced municipal Assessor, having successfully performed over 100 full-scale municipal revaluations, and successfully served as chief assessor for towns, villages and cities throughout the state of Wisconsin.

Certifications

- Assessor III Certification – WI77308CA
- Assessor II Certification – WI77308CA
- Assessor I Certification – WI77308CA

Summary of Qualifications

- Eighteen years experience in appraisal and assessment.
- In-depth knowledge of professionally accepted appraisal practices for residential, commercial, multi-family and agricultural property.
- Full working knowledge of laws and regulations pertaining to local property tax assessment.
- Strong knowledge of real estate property values and land economics.
- Extensive experience with analysis of trends in market value based on real estate sales.
- Familiarity with variations in building construction costs throughout Wisconsin.
- Extensive experience with appraisal of high-value lakefront property.
- Successful experience in defending valuations at Open Book, Board of Review, Department of Revenue appeals and circuit court.
- Experience working with a variety of mass appraisal computer systems, including Market Drive, Microsolve, GVS, MCost, and others.
- Ability to effectively communicate complex information both orally and in writing with state government, county government, elected officials, municipal staff, the media, and the general public.
- Involved in managing, training and educating of assessment staff.
- Organizational skills to effectively prioritize and manage multiple work projects.

Professional Experience

Associated Appraisal Consultants, Inc., Appleton, Wisconsin

2008 – Present
Director of Project Management, Certified Assessor Level III

- Responsible for the management of assessment staff to ensure that annual assessment work is completed accurately and in a timely manner.
- Implement policies and training in response to changes in property tax law and assessment practices.
- Supervise the creation of computerized assessment databases to ensure accuracy, completeness and compatibility with statistical analysis.
- Give expert advice to other assessors and staff regarding appraisal practices and assessment law.
- Work as part of the management team to efficiently operate the company.

2003 -- 2008
Project Manager

1314 W. College Ave. ■ P.O. Box 2111 ■ Appleton, WI 54912-2111 ■ (920) 749-1995 ■ Fax: (920) 731-4158

- Perform all statutory duties of the municipal assessor on an annual basis.
- Appraise all types of real estate according to professionally accepted appraisal practices.

2003 – 2008 Project Manager (continued)

- Act as primary contact for municipal client, including answering questions, speaking at council meetings, composing letters, and educating municipal officials about the assessment process.
- Provide training and supervision of assessment staff throughout the assessment process.
- Monitor the Municipality's assessment compliance level with respect to Department of Revenue equalized value.
- Perform annual sales ratio studies for residential commercial and agricultural property.
- Defend assessed values at Board of Review, Department of Revenue appeals and circuit court.
- Manage all stages of municipal revaluation programs and monitor the process for accuracy, professionalism and quality control.

1999 - 2003
Staff Appraiser

- Physically inspect and appraise residential, agricultural and commercial properties.
- Analyze and develop land values based on stratified sales data.
- Appraise residential property using the cost approach and sales comparison approach
- Explain and discuss assessed values with property owners during the Open Book process.

Professional Memberships

- International Association of Assessing Officers (IAAO)
- Wisconsin Association of Assessing Officers (WAAO)
- Project Management Institute (PMI)
- WAAO Education Committee — June 2012 – Present

Education

University of Wisconsin, Madison	Bachelor of Arts, 1999
Instructor – Project Management in Mass Appraisal (WAAO)	June, 2016
Instructor – Income Approach in Theory & Practice	December, 2015
Instructor – Intro to Appraisal Theory & Assessment Law	November, 2015
Valuation of Leased Commercial Property	October, 2015
Manufacturing Appeals at the Tax Appeals Commission	October, 2015
WI Property Assessment Manual Overview	October, 2015
IAAO Course 112 – Income Approach to Valuation II	December, 2014
IAAO Course 102 – Income Approach to Valuation	September, 2013
IAAO 932 Reconstructing Income & Expense Statements	March, 2013
Instructor - Three Appraisal Reports Conforming to	September, 2012
USPAP Standard 6	June, 2012
Successful Public Relations for Assessors	December, 2012
IAAO Course 311 – Residential Modeling Concepts	March, 2012
IAAO Course 101 – Fundamentals of Real Property Appraisal	March, 2012
Unique Commercial Buildings	March, 2012
IAAO Course 400 – Assessment Administration	December, 2011
IAAO Course 300 – Fundamentals of Mass Appraisal	October, 2011
USPAP 15 Hour National Course 2010-11	October, 2010
Instructor - Unique Commercial Buildings	September, 2010
Discounted Cash Flow & Band of Investment	June, 2010
Downtown Redevelopment in a Tax Incremental District	September, 2009
Property Tax Exemptions	September, 2009
Assessor Requirements & the Wisconsin Property Assessment	September, 2009
Preparing for a S. 70.85 Assessment Appeal	April, 2009
Using the Latest Mapping & GIS Tech. for Appraisal Purposes	April, 2009
Sales Validation with Foreclosure Issue Focus	March, 2009
Wisconsin Tax Policy for Assessors	March, 2009
Mega Dairy Farms	September, 2007
Appraising Convenience Stores	March, 2005

Resume

Mark Verhyen – Mobile Home and Personal Property Administrator

Associated Appraisal Consultants, Inc.
Appleton ■ Hurley ■ Lake Geneva

Objective

A skilled and experienced municipal assessor and assessment technician. Currently in a leadership role within the Personal Property Tax Department at Associated Appraisal Consultants, Inc. Prior work experience includes work in the construction field.

Certifications

- Assessor I Certification - WI98684CA
- Assessment Technician Certification – WI98684CA

Professional Experience

Associated Appraisal Consultants, Inc., Appleton, Wisconsin

2003 – Present
Mobile Home and Personal Property Administrator

- Compile the annual personal property assessment roll.
- Discover and catalog new personal property accounts for local taxable businesses.
- Create, mail, and review the annual personal property returns.
- Determine taxability or exemption of reported personal property.
- Balance the personal property assessment roll with the County Tax Lister to ensure exact correctness of assessments for tax billing.
- Administer mobile home parking permit fees for manufactured home communities.
- Physically inspect, measure and catalog mobile homes for municipal records.
- Appraise mobile homes using valuation schedule with adjustments determined by sales ratio studies.
- Mail, receive and review lottery credit eligibility reports.
- Supervise the personal property assistant and personal property clerk.
- Answer questions and concerns from taxpayers, realtors and municipal officials.

Professional Memberships

- Wisconsin Housing Alliance

Education

· Fox Valley Technical College
· Mobile Home Municipal Permit Assessments & Personal Property Assessments — October, 2012
· AAR Report — October, 2012
· Personal Property 201 — October, 2012
· Personal Property Overview — October, 2004
· Dealing with the Taxpayer from Hell (and Other Coping Strategies)October, 2004 — March, 2005

1314 W. College Ave. ■ P.O. Box 2111 ■ Appleton, WI 54912-2111 ■ (920) 749-1995 ■ Fax: (920) 731-4158

AGREEMENT FOR MAINTENANCE ASSESSMENT SERVICES

Prepared for the

City of Lake Geneva

Walworth County

By

Associated Appraisal Consultants, Inc.

Appleton ■ Hurley ■ Lake Geneva

Real Estate

1314 W. College Avenue | P.O. Box 2111
Appleton, WI 54912-2111
Phone (920) 749-1995/Fax (920) 731-4158

Lake Geneva Office
Walworth County
P.O. Box 1114
Lake Geneva, WI 53147-1114

Ironwood, Michigan Office
N10257 Lake Road
Ironwood, MI 4993

Hurley Office
Iron County
P.O. Box 342
Hurley, WI 54534-0342

AGREEMENT FOR MAINTENANCE ASSESSMENT SERVICES

This Agreement is by and between the **City of Lake Geneva, Walworth County, State of Wisconsin**, a municipal corporation (hereafter "Municipality") and ASSOCIATED APPRAISAL CONSULTANTS, INC., with its principal office at 1314 W. College Avenue, Appleton, WI 54914 (hereafter "Assessor") as follows:

I. SCOPE OF SERVICES. All services rendered shall be completed in full accordance and compliance with Wisconsin Statutes, the *Wisconsin Property Assessment Manual* and all rules and regulations officially adopted and promulgated by the Wisconsin Department of Revenue as of the date of this agreement. This agreement is being provided under the assumption all property records are in a digital format. Digital property records include digital photographs, sketches and property record data compliant with Wisconsin Department of Revenue mandates. In the event the records are not digital, there shall be an additional cost for conversion and or collection of the required property data. Additional scope of services performed by the Assessor are further described in Appendix A that is attached hereto and incorporated herein by reference.

INSPECTIONS. The following inspection cycle is to be completed by the Assessor annually:

1) New construction, annexed properties, and properties with a change in exemption status shall be physically inspected, and the property record card prepared or updated as needed.

2) Properties affected by building removal, fire, significant remodeling (those requiring a building permit), or other major condition changes shall be physically inspected.

3) Improved properties under construction over a period of years shall be re-inspected.

4) All sales properties, legal description changes, and zoning changes shall be reviewed and inspected if deemed necessary to ensure a fair assessment.

5) Requests for review by property owners, made after the close of the municipal Board of Review, and prior to signing the affidavit for the next assessment roll, shall be physically inspected during the current assessment cycle.

6) A classification review shall be conducted annually to determine eligibility for agricultural use value assessment and the assessment of agricultural forestland and undeveloped land.

A. **PARCEL IDENTIFICATION**. The legal description and size of each land parcel shall be contained in the existing property records. The drawings and measurements of each primary improvement shall be contained in the existing property records. For all new records, the Assessor shall provide digital drawings and digital photographs of each primary improvement. In the event of a discrepancy found in existing records, the Assessor shall investigate and correct the record.

B. **PREPARATION OF RECORDS**. Appropriate records shall be used in the evaluation and collection of data for residential improvements, commercial improvements, and

agricultural improvements. All information relating to the improvements shall be obtained and shown as provided on the respective forms. The Assessor shall supply to the Municipality a complete set of property records in a computer readable format compatible with the Municipality's computer system and update records within fourteen (14) days of final adjournment of the Board of Review. Records shall be updated prior to open book and again to reflect any changes made at Board of Review.

C. **APPROACH TO VALUE.** Assessor shall assess all taxable real estate according to market value, as established by professionally acceptable appraisal practices, except where otherwise provided by law. Assessor shall consider the sales comparison approach, the cost approach and the income approach in the valuation of all property.

1) **Sales Comparison Approach**. Assessor will collect, compile and analyze all available sales data for the Municipality in order to become familiar with the prevailing market conditions and activity. A detailed analysis of sales data will be prepared, including a picture book of recent residential and agricultural sales. Vacant land sales will also be compiled and analyzed. In valuing property by the sales comparison approach, subject properties will be appraised through a detailed comparison to similar properties that have recently sold, making careful consideration of similarities and differences between the subject and comparable sale properties.

2) **Cost Approach**. The cost approach to value will be considered for all taxable improved property. Replacement costs for residential and agricultural improvements will be calculated per Volume II of the *Wisconsin Property Assessment Manual*. Replacement costs for commercial improvements will be calculated using Marshall & Swift valuation service. All accrued depreciation, including physical deterioration, functional obsolescence, and economic obsolescence will be accurately documented and deducted from current replacement costs.

3) **Income Approach**. Consideration of the income approach to value will be made when the income or potential income generated by the real estate is deemed likely to affect the property's resale value. Data to be analyzed will include economic rents, typical vacancy rates and typical operation expense ratios. In the valuation of property by the income approach, adequate records will be prepared, showing a reconstruction of income and expenses, as well as all calculations used to arrive at market value, including formulas and capitalization rates as appropriate to the type of property being appraised.

D. **OPEN BOOK CONFERENCE**. Upon completion of the Assessor's review of assessments and prior to completion of the assessment roll, the Assessor shall hold open book conferences for the purpose of enabling property owners or their agents to review and compare the assessed values. The Assessor shall mail a notice of assessment for each taxable parcel of property whose assessed value has changed from the previous year. The notice form used shall be that prescribed by the Department of Revenue, and include the time and place the open book conference(s) will be held. Mailing shall not be less than fifteen days prior to the first day of the conference for the convenience of property owners. The Assessor shall take the phone calls to schedule appointments for the open book conference as needed. The assessor shall be present at the open book conference for a time sufficient to meet with the property owners or their agents

and shall be present at least two hours or as needed. Assessor shall provide the necessary staff to handle the projected attendance.

E. **COMPLETION OF ASSESSMENT ROLL AND REPORTS.** The Assessor shall be responsible for the proper completion of the assessment roll in accordance with current statutes and the *Wisconsin Property Assessment Manual*. The Assessor shall provide final assessment figures for each property to the Municipality, and the roll shall be totaled to exact balance. Assessor shall prepare and submit all reports required of the Assessor by the Wisconsin Department of Revenue including: Municipal Assessment Report (MAR), the Tax Incremental District Assessment Report (TAR), and The Annual Assessment Report (AAR). Assessor shall follow the Uniform Standards of Professional Appraisal Practice (USPAP) as required by the Wisconsin Property Assessment Manual; postage is at the Assessor's expense.

F. **BOARD OF REVIEW ATTENDANCE**. Assessor shall attend all hearings of the Municipal Board of Review to explain and defend the assessed value and be prepared to testify under oath regarding the values determined. In the event of appeal to the Wisconsin Department of Revenue or a Circuit Court, Assessor shall be available upon request of Municipality to furnish testimony in defense of the values determined for up to eight employee hours per parcel. Testimony in excess of eight employee hours will require an addendum to this agreement. Assessor shall arrange and provide the Personal Property and Real Estate Assessment Roll for viewing by the public as prescribed in Chapter 5 of the Wisconsin Property Assessment Manual, as amended each year, and adhere to any county or Municipality business requirements as prescribed under Wis. Stat. § 70.09(3)(c). If deemed necessary and mutually agreed upon by both parties, any outside counsel services requested by the Assessor shall be provided and paid for by the Municipality as agreed upon by both parties.

G. **PERSONAL PROPERTY ASSESSMENTS**. The Assessor shall prepare and distribute annual personal property statements to all businesses; postage is at the Assessor's expense. By May 1st each year the Assessor will review statements and follow up with un-filed or incorrect statements. The Assessor shall determine the appropriate assessment. The Assessor shall exercise particular care so that personal property as a class on the assessment roll bears the same relation to statutory value as real property as a class.

H. **PUBLIC REQUESTS**. The Assessor shall timely respond to all open records requests received by the Assessor. In so doing, the Assessor shall comply with the confidentiality provisions of the law, including sec. 70.35(3), regarding the personal property return; sec. 70.47(7)(af), regarding income and expense information provided to the assessor and board of review; and sec. 77.265, the real estate transfer return.

I. **AVAILABLITY.** The Assessor shall maintain telephone service to receive calls from the Municipality or property owners five days a week from 8:00 a.m. to 4:30 p.m. excluding holidays and company paid time off. Internet communication is available twenty-four hours per day. The Assessor shall timely respond to all telephone inquiries within two working days or sooner. The Assessor shall copy the municipal clerk on those issues that have been raised to the clerk or board and subsequently passed on to the Assessor. Assessor shall be available to attend City meetings at the request of the Municipality for up to eight (8) hours annually not including annual assessment required meetings. Any additional meetings the Assessor shall be asked to attend beyond eight (8) hours shall be compensated at the customary rates charged by the Assessor. The Municipality and the Assessor shall discuss the cost prior to attendance.

J. **MUNICIPAL RECORDS**. The Municipality shall allow access and make available to the Assessor municipal records such as, but not limited to, previous assessment rolls and records, sewer and water layouts, permits, tax records, records of special assessments, plats, and any other maps currently in the possession of the Municipality at no cost.

K. **MAPS**. Municipality shall provide at no cost to Assessor any plat maps, zoning maps, cadastral maps, or other maps currently in the possession of the Municipality. If such maps necessary for our work are not in the possession of the Municipality, Assessor shall obtain them from the County surveyor, Register of Deeds, or other sources at the Municipality's expense.

II. GENERAL REQUIREMENTS

A. **OATH OF OFFICE**. As the Assessor is a corporation, the person designated as responsible for the assessment shall take and subscribe to an oath or affirmation supporting the Constitution of the United States and to the State of Wisconsin and to faithfully perform the duties of Assessor. The oath shall conform to Section 19.01, Wis. Stats. and be filed with the Municipal Clerk prior to commencing duties. Assessor shall assume the appointed office of City assessor as per Wisconsin Statutes 70.05 (1) for the duration of this contract and shall perform all statutory duties appertaining to such office. As such the Municipality shall hold harmless the Assessor from all claims and liabilities relating to the assessment or taxation of property, including but not limited to claims made under Statutes 74.35, 74.37 and circuit court claims, unless otherwise specified in this agreement.

B. **QUALIFICATIONS AND CONDUCT OF PERSONNEL**. The Assessor shall provide at its own expense any personnel necessary and shall comply with the following:

1) All personnel providing services shall be currently certified in compliance with Sec. 70.05 and 73.09, Wis. Stats. and the administrative rules prescribed by the Wisconsin Department of Revenue.

2) Assessor's field representatives shall carry photo identification cards.

3) All employees, agents, or representatives of the Assessor shall conduct themselves in a safe, sober, and courteous manner while performing services within the Municipality.

4) The Assessor shall review any complaint relative to the conduct of the Assessor's employees and take appropriate corrective action. If the Municipality deems the performance of any of Assessor's employees unsatisfactory, the Assessor shall, for good cause, remove such employees from work upon written request by Municipality.

C. **ASSESSOR PROVIDED INSURANCE AND INDEMNITY**. The Assessor agrees as follows:

1) The Assessor shall obtain and maintain during the term of this contract full coverage insurance to protect and hold harmless the Municipality which insurance is to include:

(a) <u>Workers Compensation</u> State of Wisconsin requirements

(b) General Liability

General Aggregate	$ 2,000,000
Products/Completed Operations	$ 1,000,000
Each Occurrence	$ 1,000,000
Personal & Advertising	$ 1,000,000
Fire Damage	$ 100,000
Medical Expense	$ 10,000

(c) Comprehensive Auto Liability

Combined Single Limit	$ 1,000,000

2) The Assessor shall provide the Municipality with certificates for all required insurance, with the Municipality as a named insured. All insurance coverage shall contain a 10-day advance notice of cancellation to the Municipality. The Assessor shall timely pay all insurance premiums.

3) Liability for bodily injury, disability, and/or death of employees or any person or for damage to property caused in any way, directly or indirectly, by the operations of the Assessor within the Municipality shall be assumed by that Assessor.

D. **OWNERSHIP OF RECORD**. All records prepared or maintained in connection with assessments in the Municipality shall at all times be and remain the sole property of the Municipality, including (a) all records prepared in connection with assessments in the Municipality including, but not limited to property records, personal property forms, maps, and any other schedules or forms, (b) all records and materials obtained from the municipality and not previously returned to include maps, and Assessor's records, and (c) materials specifically obtained and/or used for performance of assessment work for the Municipality, to include aerial photos, maps, depth factor tables, copies of leases, correspondence with property owners, sales data, copies of real estate transfer returns, and operating statements of income property, and (d) if the record system is computerized, at a minimum, provide that the software be able to create an exportable text file of data.

III. TERM AND TERMINATION

A. **TERM.** The term of this Contract is for the **2019, 2020 and 2021** assessment year(s). The assessor shall have completed all work under this agreement on or before the fourth Monday in April or 45 days thereafter, excluding appearances beyond the Board of Review. The date of completion may be extended, if necessary, under the terms of this contract and by mutual consent.

B. **TERMINATION.** Either party may terminate this Contract only with cause, cause being defined as default of the other party of terms of this Contract upon sixty (60) days written notice to the other party. Upon termination by either party, Assessor shall deliver to the Municipality all records and materials in Assessor's possession used or created during this Contract. During the 60-day wind down period, both Assessor and the Municipality shall act in good faith with each other and cooperate in the orderly transfer of records.

C. **AUTOMATIC RENEWAL**. This Agreement will automatically renew for successive annual assessment years unless either party, on or before July 1 of the preceding year, notifies the other party by certified mail of their desire to non-renew.

IV. COMPENSATION

A. The Municipality shall pay the Assessor **Forty Thousand Dollars ($40,000.00)** for 2019, 2020 and for the 2021 assessment year(s) for maintenance services through December 31, 2021.

B. The compensation due the Assessor shall be paid in monthly installments throughout the 2019, 2020 and 2021 assessment year(s).

C. The Municipality shall not be billed for postage, mileage or supplies unless otherwise specified in this agreement and/or addenda.

D. Additional compensation that may be due to the Assessor as a result of services that are beyond the scope of this agreement will be invoiced in the month subsequent to the month in which the services were provided.

E. Future Year Adjustments: A cost of living adjustment of not more than three percent (3.0%) will be applied on an annual basis for each year of renewal.

F. **Optional Website Posting**: The Municipality shall have the option to post their assessment data on our website for no additional charge.
***** Please initial yes or no to post data to the website. *****
Yes ____ No ____

V. SIGNATURES

Mark Brown
President
Associated Appraisal Consultants, Inc.

7/27/2018
Date

Authorized Signature
City of Lake Geneva

Date

APPENDIX A
ADDITIONAL SCOPE OF SERVICES

This Appendix A is attached to and incorporated into the agreement for maintenance assessment services made by and between the **City of Lake Geneva, Walworth County, State of Wisconsin**, a municipal corporation (hereafter "Municipality") AND ASSOCIATED APPRAISAL CONSULTANTS, INC., with its principal office at 1314 W. College Avenue, Appleton, WI 54914 (hereafter "Assessor").

In consideration of the promises and agreements hereinafter set forth, and in consideration of the execution of those promises, both parties agree to the following:

OPTIONAL – INTERIM MARKET UPDATE

I. **SCOPE OF SERVICES.** This optional service shall be provided only upon request by the Municipality. Assessor shall perform an interim market update revaluation for the **2020** or **2021** assessment year of all taxable real estate and personal property during this additional scope of services agreement. Please circle and initial the year the revaluation is to take place.

II. **DURATION.** Assessor shall complete all work on or before October 30th of the year in which the interim market revaluation service is conducted. If unforeseen circumstances delay the completion of work, an extension will be granted upon mutual agreement.

III. **COMPENSATION**
This additional scope of services agreement runs simultaneously with the 2019-2021 Agreement for Maintenance Assessment Services. The Municipality shall pay the Assessor an additional **Sixty Thousand Dollars ($60,000.00)** during the interim market update revaluation assessment year. Total compensation during the interim market update revaluation year shall be **One Hundred Thousand Dollars ($100,000.00)**.

A. The compensation due the Assessor shall be made on a monthly basis for services and expenses incurred during a Revaluation year. Monthly invoices shall reflect the percentage of work completed, less 5 percent retained by the Municipality until completion of the revaluation and final adjournment of the Board of Review. This monthly payment schedule would apply to the Interim Market Update assessment year.

SIGNATURES

Mark Brown
President
Associated Appraisal Consultants, Inc.

7/27/2018
Date

Authorized Signature
City of Lake Geneva

Date

ASSOC02 OP ID: JV

CERTIFICATE OF LIABILITY INSURANCE

DATE (MM/DD/YYYY) 05/21/2018

THIS CERTIFICATE IS ISSUED AS A MATTER OF INFORMATION ONLY AND CONFERS NO RIGHTS UPON THE CERTIFICATE HOLDER. THIS CERTIFICATE DOES NOT AFFIRMATIVELY OR NEGATIVELY AMEND, EXTEND OR ALTER THE COVERAGE AFFORDED BY THE POLICIES BELOW. THIS CERTIFICATE OF INSURANCE DOES NOT CONSTITUTE A CONTRACT BETWEEN THE ISSUING INSURER(S), AUTHORIZED REPRESENTATIVE OR PRODUCER, AND THE CERTIFICATE HOLDER.

IMPORTANT: If the certificate holder is an ADDITIONAL INSURED, the policy(ies) must be endorsed. If SUBROGATION IS WAIVED, subject to the terms and conditions of the policy, certain policies may require an endorsement. A statement on this certificate does not confer rights to the certificate holder in lieu of such endorsement(s).

PRODUCER
ADEMINO & ASSOCIATES INC
DAVID ADEMINO
1001 TRUMAN P O BOX 99
KIMBERLY, WI 54136-0099
DAVID VAN BOOGARD

CONTACT NAME: DAVID VAN BOOGARD
PHONE (A/C, No, Ext): 920-734-3110 FAX (A/C, No): 920-734-6027
E-MAIL ADDRESS: dvanboogard@ademino.com

INSURER(S) AFFORDING COVERAGE	NAIC #
INSURER A : WEST BEND MUTUAL INS	15350
INSURER B : UNDERWRITERS AT LLOYDS, LONDON	
INSURER C :	
INSURER D :	
INSURER E :	
INSURER F :	

INSURED
ASSOCIATED APPRAISAL CONSULTANTS INC
& GP ACQUISITION INC
PO BOX 2111
APPLETON, WI 54912

COVERAGES CERTIFICATE NUMBER: REVISION NUMBER:

THIS IS TO CERTIFY THAT THE POLICIES OF INSURANCE LISTED BELOW HAVE BEEN ISSUED TO THE INSURED NAMED ABOVE FOR THE POLICY PERIOD INDICATED. NOTWITHSTANDING ANY REQUIREMENT, TERM OR CONDITION OF ANY CONTRACT OR OTHER DOCUMENT WITH RESPECT TO WHICH THIS CERTIFICATE MAY BE ISSUED OR MAY PERTAIN, THE INSURANCE AFFORDED BY THE POLICIES DESCRIBED HEREIN IS SUBJECT TO ALL THE TERMS, EXCLUSIONS AND CONDITIONS OF SUCH POLICIES. LIMITS SHOWN MAY HAVE BEEN REDUCED BY PAID CLAIMS.

INSR LTR	TYPE OF INSURANCE	ADDL INSD	SUBR WVD	POLICY NUMBER	POLICY EFF (MM/DD/YYYY)	POLICY EXP (MM/DD/YYYY)	LIMITS		
A	X COMMERCIAL GENERAL LIABILITY						EACH OCCURRENCE	$	1,000,000
	CLAIMS-MADE X OCCUR			A323069	08/16/2017	08/16/2018	DAMAGE TO RENTED PREMISES (Ea occurrence)	$	300,000
							MED EXP (Any one person)	$	5,000
							PERSONAL & ADV INJURY	$	1,000,000
	GEN'L AGGREGATE LIMIT APPLIES PER:						GENERAL AGGREGATE	$	2,000,000
	POLICY PRO-JECT LOC						PRODUCTS - COMP/OP AGG	$	3,000,000
	OTHER:							$	
	AUTOMOBILE LIABILITY						COMBINED SINGLE LIMIT (Ea accident)	$	1,000,000
A	X ANY AUTO			A323069	08/16/2017	08/16/2018	BODILY INJURY (Per person)	$	
	ALL OWNED AUTOS / SCHEDULED AUTOS						BODILY INJURY (Per accident)	$	
	HIRED AUTOS / NON-OWNED AUTOS						PROPERTY DAMAGE (Per accident)	$	
								$	
	X UMBRELLA LIAB X OCCUR						EACH OCCURRENCE	$	3,000,000
A	EXCESS LIAB CLAIMS-MADE			A323069	10/01/2017	08/16/2018	AGGREGATE	$	3,000,000
	DED X RETENTION $ WAIVED							$	
	WORKERS COMPENSATION AND EMPLOYERS' LIABILITY						X PER STATUTE / OTH-ER		
	ANY PROPRIETOR/PARTNER/EXECUTIVE OFFICER/MEMBER EXCLUDED? Y / N N	N / A		A339201	10/01/2017	08/16/2018	E.L. EACH ACCIDENT	$	100,000
	(Mandatory in NH) If yes, describe under DESCRIPTION OF OPERATIONS below						E.L. DISEASE - EA EMPLOYEE	$	100,000
							E.L. DISEASE - POLICY LIMIT	$	500,000
B	ERRORS & OMISSIONS			PGIARK06509-01	08/16/2017	08/16/2018	$10000DED		1,000,000

DESCRIPTION OF OPERATIONS / LOCATIONS / VEHICLES (ACORD 101, Additional Remarks Schedule, may be attached if more space is required)

CERTIFICATE HOLDER

SAMPL-1

SAMPLE CERTIFICATE

CANCELLATION

SHOULD ANY OF THE ABOVE DESCRIBED POLICIES BE CANCELLED BEFORE THE EXPIRATION DATE THEREOF, NOTICE WILL BE DELIVERED IN ACCORDANCE WITH THE POLICY PROVISIONS.

AUTHORIZED REPRESENTATIVE

David M. Ademino

© 1988-2014 ACORD CORPORATION. All rights reserved.

The ACORD name and logo are registered marks of ACORD

Lake Geneva Fire Department

Memo

To: Finance, License, and Regulation Committee

From: John Peters, Fire Chief

cc: PFC, Acting City Administrator

Date: October 5, 2018

Re: Car 1 Replacement (ERF)

Background:
Car 1 is to be replaced with a 2019 Ford Expedition. Car 1 (2009) will be moved into our pool of fleet vehicles and replace Car 3, a 2000 Ford Crown Victoria received from police department in 2013. Car 3 was due for replacement in 2017.

Discussion:
Duties of this vehicle has out grown it size. Current equipment precludes transporting personnel and equipment. Additionally equipment is stored in an unsecured/unsafe manner.

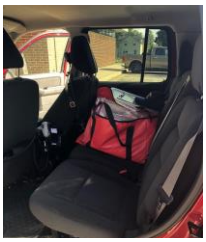

Recommendation:
We recommend authorizing the immediate purchase of a 2019 Ford Expedition as outlined in the equipment replacement plan and as quoted in the State Group Purchase Agreement. Vehicle orders received by Ford, after October 31st, 2018, will result in a 3% increase in cost.

Budget Impact:
$46,000.00 as presented in our 2019 budget request and equipment replacement plan.

Lake Geneva Police Department

Memo

To: Finance Committee

From: Lt. Gritzner

Date: 10/09/2018

Re: 2019 Ford Police Interceptor fleet order

Greetings-

The City of Lake Geneva Police Department is set to replace patrol cars 203 and 204 in 2019. These two patrol cars are used daily and high priority for replacement. As a courtesy, we were notified by the state bid coordinator at Ewald Ford that all orders would had to be placed by September 21st this year to obtain the 2019 model state bid price and avoid having to order the 2020 model.

Meeting the deadline was imperative as the body style on the 2020 model is changing. Those changes would have cost an additional $4,000 per vehicle on the base price and an additional $6,000-$10,000 per car in equipment as our current equipment may not conform to the 2020 model body style changes.

Chief Rasmussen spoke with Mayor Hartz who gave us the approval to place the order. I did place the order for one Ford Police Interceptor sedan and one Ford Police Interceptor utility to replace squads 203 and 204 on September 21st.

I have attached the order forms.

Thanks-Lt. Gritzner

Ewald Automotive Group
Chrissy Gensch | 262-673-9400 | cgensch@ewaldauto.com

[Fleet] 2019 Ford Police Interceptor Sedan (P2M) AWD

Quote Worksheet

Base Price		MSRP
Dest Charge		$29,510.00
Adjustments		$995.00
Total Options		$0.00
		$4,920.00
	Subtotal	**$35,425.00**
	Subtotal Pre-Tax Adjustments	**$0.00**
Less Customer Discount		($6,743.00)
	Subtotal Discount	**($6,743.00)**
Trade-In		$0.00
	Subtotal Trade-In	**$0.00**
	Taxable Price	**$28,682.00**
Sales Tax		$0.00
	Subtotal Taxes	**$0.00**
	Subtotal Post-Tax Adjustments	**$0.00**
	Total Sales Price	**$28,682.00**

Comments:

2019 Ford Sedan Interceptor to the specifications as detailed. Registration and fees are not included. Delivery can be anticipated approximately 14-16 weeks from order. Payment terms are net 10 days.

Final order date is 9/21/18, all orders must be placed before this date.

Dealer Signature / Date

L.E. #160 / 09/21/18
Customer Signature / Date

Standard Equipment

Mechanical

Engine: 3.7L Ti-VCT V6 (FFV) (STD) Flex fuel is not available in states with California emissions standards: CA, CT, DE, MA, MD, ME, NJ, NY, OR, PA, RI, VT and WA.

Transmission: 6-Speed Automatic -inc: Exclusively police calibrated for maximum acceleration and faster closing speed (STD)

Transmission w/Oil Cooler

This document contains information considered Confidential between GM and its Clients uniquely. The information provided is not intended for public disclosure. Prices, specifications, and availability are subject to change without notice, and do not include certain fees, taxes and charges that may be required by law or vary by manufacturer or region. Performance figures are guidelines only, and actual performance may vary. Photos may not represent actual vehicles or exact configurations. Content based on report preparer's input is subject to the accuracy of the input provided.
Data Version: 6365. Data Updated: Aug 20, 2018 9:23:00 PM PDT.

Ewald Automotive Group
Chrissy Gensch | 262-673-9400 | cgensch@ewaldauto.com

[Fleet] 2019 Ford Police Interceptor Utility (K8A) AWD

Quote Worksheet

Base Price		**MSRP**
Dest Charge		$33,275.00
Adjustments		$995.00
Total Options		$0.00
		$4,845.00
	Subtotal	**$39,115.00**
	Subtotal Pre-Tax Adjustments	**$0.00**
Less Customer Discount		
		($6,943.00)
	Subtotal Discount	**($6,943.00)**
Trade-In		
		$0.00
	Subtotal Trade-In	**$0.00**
	Taxable Price	**$32,172.00**
Sales Tax		
		$0.00
	Subtotal Taxes	**$0.00**
	Subtotal Post-Tax Adjustments	**$0.00**
	Total Sales Price	**$32,172.00**

Comments:

2019 Ford Utility Interceptor to the specifications as detailed. Registration and fees are not included. Delivery can be anticipated approximately 14-16 weeks from order. Payment terms are net 10 days.

Final order date is 9/21/18, all orders must be placed before this date.

Dealer Signature / Date

L.E. #160 / 09/21/18
Customer Signature / Date

Standard Equipment

Mechanical

Engine: 3.7L V6 Ti-VCT FFV (STD)

Transmission: 6-Speed Automatic (STD)

3.65 Axle Ratio (STD)

Transmission w/Oil Cooler

This document contains information considered Confidential between GM and its Clients uniquely. The information provided is not intended for public disclosure. Prices, specifications, and availability are subject to change without notice, and do not include certain fees, taxes and charges that may be required by law or vary by manufacturer or region. Performance figures are guidelines only, and actual performance may vary. Photos may not represent actual vehicles or exact configurations. Content based on report preparer's input is subject to the accuracy of the input provided.
Data Version: 6365. Data Updated: Aug 20, 2018 9:23:00 PM PDT.

City of Lake Geneva Public Works

Street Department

1065 Carey St. Lake Geneva WI. 53147

(262)248-6644 f(262)248-4913

10 Oct., 2018

RE; 2018 Lake Geneva City Hall Building Automation Control System Upgrade.

It is my recommendation to award above project to Mared Mechanical Systems. Based on a review of the 3 bids we received one was more expensive and one was lower. The lower bid did not include base material called for in the spec or installation in a manner the City would expect.

The needed BACNET controllers which are integral to the system function are not supplied in the lower bid nor replacement/install of same which was in the spec.

Although I believe someone else could handle the project if given the opportunity, Mared is intimate with our system to a point of no other contractor and I remain of the opinion Mared's bid is the most advantageous at this time.

Tom Earle, COLG DPW

Mared mechanical
Flexible Services Smart Solutions

Proposal

Sheet Metal
Piping
Fire Protection
Plumbing
Temperature Controls
24 Hr. Service

Date: 8-7-18

To: Lake Geneva City Hall
Attn: Tom Earle
626 Geneva St
Lake Geneva, Wi 53147

Re: Building Automation Control System Upgrade, City Hall only.

Mared Mechanical Corporation is pleased to provide this proposal for the above-mentioned project, to include the following:
Includes the following equipment.
Network Supervisor.
BACnet controllers for each of the three (3) AHU'S, Hot water and Chilled water systems.
Interlock the energy recovery unit with the AHU'S occupied fan schedule.
Re-use existing 3-way control valves.
New BACnet controls for the VAV boxes and baseboard heat.
New thermostats with LCD display and adjustments.
New baseboard hot water control valves.
Removal of all old controls.
New point and click graphics.
Time schedules.
Holiday schedules.
Alarms.
Trends.
Owner training and over the phone support.
Two-year parts only warranty.
One-year warranty parts and labor.
Total net Price $75,532.00

Not Included in this Proposal
New computer or laptop.
Intranet connection.

4230 W Douglas Ave • Milwaukee, WI 53209 • Tel: (414) 536-0411 • Fax: (414) 536-0534 • www.maredmechanical.com

Mared mechanical

Flexible Services Smart Solutions

Joe Wantz, Direct 414-238-2286 Fax 414-431-0693 jwantz@maredmechanical.com

This proposal is hereby accepted and
Mared Mechanical is authorized to proceed with work;
Subject to credit approval by Mared Mechanical.

This proposal is valid for 90 days.

Joe Wantz

Signature

Name: _____

Date: _____

Signature

Name: Joe Wantz 8-7-18

Title: Account Executive

TERMS AND CONDITIONS

1. **SCOPE OF WORK**. The scope of Mared's work is described on the front side of this Agreement. Mared shall be entitled to additional compensation for any and all additional work, labor, equipment, components and materials furnished or performed by Mared outside or beyond said scope of work as described in this Agreement. Unless otherwise agreed in writing, additional compensation shall be charged on a time and materials basis at Mared's current prevailing rates.

2. **PAYMENT TERMS**. Full payment shall be due and payable upon completion of the work by Mared. All past due balances upon all invoices that have not been paid in full within 30 days after issuance shall draw interest at a rate of 1.5% per month until said balance, together with all accrued interest, has been paid in full. Customer agrees to reimburse and pay Mared for all costs and expenses, including reasonable attorneys' fees, incurred by Mared in connection with the collection of any and all sums payable by Customer.

3. **SUSPENSION AND TERMINATION**. If this Agreement requires payment in installments, should Customer fail to make full and timely payment of any such installment, Mared may suspend all further performance until payment is received. In the event of any material breach by Customer, Mared may, in its sole discretion, suspend all further performance until Customer has cured said breach. Mared shall be entitled to payment for all additional costs or expenses incurred due to such suspension of performance. Alternatively, and in Mared's sole discretion, Mared may terminate this agreement in the event of a material breach by Customer. In the event of termination, Mared shall be entitled to full payment on a time and materials basis for all work, services, labor and materials performed or provided and for all equipment and materials ordered, procured or fabricated for the project, together with overhead, lost profit, and all incidental and consequential damages. In the event of suspension or termination, Mared shall also be entitled to recover all collection costs and attorneys' fees pursuant to Paragraph 2.

4. **INFORMATION**. Mared shall be entitled to rely upon, and shall not be required to test, confirm or verify, all information provided by the Customer, the owner, or a municipal or governmental body, district or agency, respecting the work to be performed by Mared pursuant to this Agreement. Such information shall include, without limitation, plans or specifications, dimensions, measurements, capacities, water supply data including volume, pressure and flow, and all data regarding location, elevation, and existing conditions. Customer agrees and understands that Mared may use and rely upon said information in connection with component and equipment selection, system design, pipe and duct sizing, and in the general performance of its work. Customer agrees that Mared shall not be responsible for any error, inaccuracy, or deficiency in such information, and Customer agrees to pay all additional costs, including for all additional work or changes in the work (including changes in system design) resulting from any such error, inaccuracy or deficiency in such information provided to Mared.

5. **SOLE AND EXCLUSIVE LIMITED WARRANTY/LIMITATION OF REMEDIES**. Mared warrants that its work shall be free from material defects in workmanship or materials for a period of one year from the date of substantial completion of Mared's work. Mared agrees to repair material defects in its workmanship or materials, provided that Mared has received prompt written notice of said defect within said one-year warranty period. Receipt by Mared of timely written notice of a claimed defect within the one-year warranty period shall be a strict condition precedent to Mared's repair obligation under this sole and exclusive limited warranty. Mared's repair obligations under this paragraph shall be Customer's sole and exclusive remedy against Mared under this limited warranty. Mared disclaims all warranties, express or implied, regarding all components or equipment manufactured by others, even if procured, provided or installed by Mared; and the Customer's sole warranty with regard to such components and equipment shall be the warranty (if any) provided by the manufacturer. EXCEPT AS OTHERWISE PROVIDED IN THIS PARAGRAPH, MARED DISCLAIMS ALL OTHER WARRANTIES, EXPRESS OR IMPLIED, INCLUDING, WITHOUT LIMITATION, ANY WARRANTY OF MERCHANTABILITY OR FITNESS FOR A PARTICULAR PURPOSE. CUSTOMER AGREES THAT IN NO EVENT SHALL MARED BE LIABLE FOR ANY INDIRECT, SPECIAL, INCIDENTAL OR CONSEQUENTIAL DAMAGES. CUSTOMER AGREES THAT IN NO EVENT SHALL MARED'S LIABILITY TO CUSTOMER FOR ANY CLAIM IN ANY WAY ARISING FROM THIS AGREEMENT EXCEED THE PRICE FOR THE WORK TO BE PERFORMED BY MARED UNDER THIS AGREEMENT.

6. **DISPUTE RESOLUTION**. The parties agree that in the event of a dispute of any kind between Mared and Customer in any way arising from this Agreement or from either party's performance hereunder, that at Mared's sole option and election said dispute shall be decided by binding arbitration. The arbitration shall be conducted in Milwaukee Wisconsin by Resolute Systems, Inc., or by another arbitrator mutually agreeable to both Mared and to Customer. The arbitration shall be conducted in general accordance with the Construction Industry Arbitration Rules of the American Arbitration Association (excluding provisions regarding AAA fees), but in every case the parties shall have the right to conduct such discovery, including the taking of depositions, as shall be permitted by the arbitrator in his or her discretion. All fees and costs charged by the arbitrator shall be paid in equal shares by the parties, subject to Paragraph 7. If Mared does not elect arbitration, said dispute shall be decided by litigation in Milwaukee County Circuit Court.

7. **FEES AND COSTS**. In the event of any dispute between Mared and Customer in any way arising from this Agreement or from either party's performance hereunder, including without limitation the enforcement of this Agreement or any of its terms, Mared shall be entitled to recover and collect from Customer all of Mared's costs and expenses incurred in connection with said dispute, including, without limitation, all actual attorney's fees, expert consultant and expert witness fees, arbitration fees, mediation fees, court reporting fees, and court costs, provided that Mared prevails as to any claim, issue or defense. This recovery shall include all costs incurred by Mared in successfully defending any claim or counterclaim against Mared asserted by Customer. Mared shall be entitled to such recovery even if the dispute is resolved informally without resort to arbitration or litigation.

8. **DELAYS**. Mared shall not be liable or responsible for any delay in the performance or completion of its work due to circumstances, or to the acts or omissions of others, beyond Mared's control including, without limitation, acts of God, fire, riots, labor disputes, war, weather, acts or omissions of Customer, owner, or other contractors, subcontractors, or suppliers.

9. **CHANGES.** No change or modification of any of the terms and conditions stated in this Agreement shall be binding upon Mared unless specifically agreed to by Mared in writing.

10. **ENTIRE AGREEMENT.** The terms of this Agreement shall constitute the entire agreement between the parties, and supersedes any prior negotiations, offers, discussions, representations or understandings.

CENTURY FENCE COMPANY
SINCE 1917 THE MARK OF PERMANENCE
P.O. Box 727, Pewaukee, WI 53072-0727

Office 262-547-3331
Toll Free 800-558-0507
Fax 262-691-3463
Cellular 262-993-5516
tfoerster@centuryfence.com
7/31/2018

Phone: 262-248-6644 **Fax:** 262-248-4913

Proposal To:
Lake Geneva, City of
Tom Earle
1065 Carey Street
Lake Geneva, WI 53147

Ship To:
Dog Park
600 Waverly St
Lake Geneva, WI 53147

☑ Installed ☐ Material Only ☐ Prepaid Freight ☐ Freight Collect **F.O.B.** Job Site **Delivery Schedule:**

Description

----------50' x 50'----------
88' Chain link fence, 6' high overall. Fabric shall be 2" mesh 9 gauge galvanized wire. Line posts shall be 2 1/2" O.D. SS30 and spaced a maximum of 10' on centers. The top rail shall be galvanized 1 5/8" O.D. Tension wire stretched along the bottom of the fence.

1 - Double swing gate 12' wide by 6' high. Frame shall be constructed of 2" steel pipe welded at all corners to form a rigid panel.

2 - 4" SS30 steel pipe Gate posts, 6' high.
2 - 3" SS30 steel pipe Corner posts, 6' high.
All posts set in concrete foundations.

Material and Labor: $3,813.00

----------41' x 121'----------
150' Chain link fence, 6' high overall. Fabric shall be 2" mesh 9 gauge galvanized wire. Line posts shall be 2 1/2" O.D. SS30 and spaced a maximum of 10' on centers. The top rail shall be galvanized 1 5/8" O.D. Tension wire stretched along the bottom of the fence.

1 - Double swing gate 12' wide by 6' high. Frame shall be constructed of 2" steel pipe welded at all corners to form a rigid panel.

2 - 4" SS30 steel pipe Gate posts, 6' high.
1 - 3" SS30 steel pipe Corner posts, 6' high.
All posts set in concrete foundations.

Material and Labor: $4,544.00

----------60' x 80' WITH KENNEL ENTRANCE----------
148' Chain link fence, 6' high overall. Fabric shall be 2" mesh 9 gauge galvanized wire. Line posts shall be 2 1/2" O.D. SS30 and spaced a maximum of 10' on centers. The top rail shall be galvanized 1 5/8" O.D. Tension wire stretched along the bottom of the fence.

1 - Double swing gate 12' wide by 6' high. Frame shall be constructed of 2" steel pipe welded at all corners to form a rigid panel.
2 - Single swing gate 4' wide by 6' high. Frame shall be constructed of 2" steel pipe welded at all corners to form a rigid panel

2 - 4" SS30 steel pipe Gate posts, 6' high.
4 - 3" SS30 steel pipe Gate posts, 6' high.
3 - 3" SS30 steel pipe Corner posts, 6' high.
All posts set in concrete foundations.

w/ concrete $10,083

Material and Labor: $6,103.00

excludes: private underground utility locate, rock / fill excavation

Acceptance: This proposal when accepted in writing by purchaser and by Century Fence Company's Main Office becomes a contract between two parties. The conditions on the attached "Terms and Conditions" sheet are made a part of this contract.
Terms of Payment: Net Cash upon receipt of invoice.
Buyer's signature _____ Date _____ Submitted by _____
Tom Foerster

Humphreys Contracting LLC

P.O. Box 444
Lake Geneva, WI 53147
262 749 8438
262 248 9700

7/30/18

To:
City of Lake Geneva
Attn: Neil Waswo

Re: Dog Park concrete

We propose to provide material and labor to complete the following items at the dog park;
A 75'x 5' concrete sidewalk leading to the new proposed small dog entrance
A 10'x 10' concrete pad for the small dog holding pen

All concrete shall be poured in place on well compacted granular fill. Concrete to be 6 bag strength with reinforcement as required. Control joints to be installed at schedule to minimize shrinkage cracking, however cracking is inherent to the material. Concrete to have a smooth broom finish
All labor and material and excavation are included for a complete job.

The following work shall be completed for the sum of: $ 3980

Terms: Net due upon completion. A service charge of 1-1/2 % per month will be charged on all accounts over 30 days. This proposal is submitted by Chris Humphreys DBA Humphreys Contracting. This proposal may be withdrawn after 10 days upon our discretion. The document shall serve as contract upon signing.

Acceptance of Proposal

The above prices, specifications and conditions are satisfactory and are hereby accepted. We authorize Humphreys Contracting to do the work as described. Payment will be made as outlined above. Please sign and return.

Signature_____Date_____

KAPUR & ASSOCIATES

City of Lake Geneva

Legend

- Street Names
- Private Roads
- Addresses @ 5000
- County Municipalities
- Tax Parcels (Air Photo)
- Parks
- Sidewalk
- Bike Trails
  - Existing Path, Brown Route
  - On Street, Blue Route
  - Existing Path, Blue Route
  - Future Path, Yellow Route
  - Existing Path, Green Route
  - Existing Path, Yellow Route
  - Existing Path, Red Route
- Alley
- Right-Of Way
- Hydrology
- ETZ
- Building Footprints
- City Limits
- City Limits Mask
- Aerial Photo 2015
  - Red: Band_1
  - Green: Band_2
  - Blue: Band_3

Notes

0.0 0 0.01 0.0 Miles

WGS_1984_Web_Mercator_Auxiliary_Sphere

© Kapur and Associates, Inc. 02/19/2018

This map is a user generated static output from an Internet mapping site and is for reference only. Data layers that appear on this map may or may not be accurate, current, or otherwise reliable.

THIS MAP IS NOT TO BE USED FOR NAVIGATION

REPLACEMENT

#22 1997 IHC 4900 5-yd plow truck.

70042 miles. 7803 hours. DT466 Navistar @ 250bhp

Monroe MP41-R11 and 6” spreader.

This truck is the primary plow truck for 4th ward. It is a 1997 model which will put it at 21 years old at the end of this season. This truck has experienced electrical issues for the past 8 years, has stress issues with the frame and currently is awaiting repair of the box lift mounting system.

As in any plow truck, maintenance becomes an issue after apx. 15 years. Years of hard plowing, pulling leaf vacs and general labor has taken its toll making reliability difficult.

It is scheduled for replacement in 2019 with $190,000.00 allocated in the replacement fund. The proposed replacement, a 2019 IH HV507 SFA has a Monroe set up with an MP41R11-ISCT full trip reversible plow. Stainless 6” auger and spreader. Stainless 5yd box. 8’ patrol trip edge wing. Cummins L9 @ 350bhp, 1000ft./lbs. 22.5” tires vs. 20”. Polished aluminum fronts, non-polished rears. Entire spec can be seen in attachment. Because we have looked at this truck as a spec buy from our dealer, we can save an estimated 7% over spec’ing it out ourselves as well as taking delivery 7 months sooner. Current replacement cost; $165,875.00

210
230
°F
WATER
40
60
PSI
OIL
80
100
0
5
10
15
20
25
30
35
RPM
X100
HOURS
0078035
INTERNATIONAL

0
5
15
25
35
45
55
65
75
85
MPH
Km/h
MILES
0700427
E
1/2
FUEL
10
12
14
16
VOLTS
NATIONAL

INTERNATIONAL®

September 20, 2018

Prepared For:
CITY OF LAKE GENEVA
Tom Earle
361 Main St
Lake Geneva, WI 53147-
(262)248 - 6644
Reference ID: N/A

Presented By:
LAKESIDE INTL, LLC
Patrick McNamara
11000 W SILVER SPRING RD
MILWAUKEE WI 53225 -
(414)353-4800

Thank you for the opportunity to provide you with the following quotation on a new International truck. I am sure the following detailed specification will meet your operational requirements, and I look forward to serving your business needs.

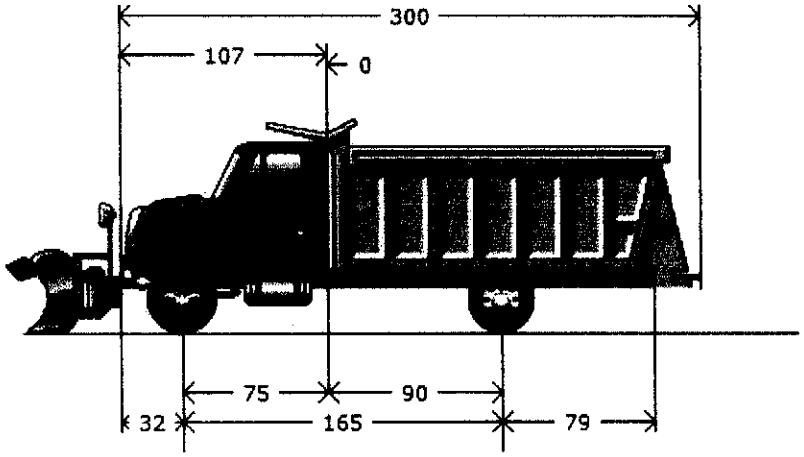

Model Profile
2019 HV507 SFA (HV507)

AXLE CONFIG:	4X2
APPLICATION:	Front Plow and Wing with Spreader
MISSION:	Requested GVWR: 43000. Calc. GVWR: 43000 Calc. Start / Grade Ability: 30.89% / 2.99% @ 55 MPH Calc. Geared Speed: 67.8 MPH
DIMENSION:	Wheelbase: 165.00, CA: 90.00, Axle to Frame: 79.00
ENGINE, DIESEL:	{Cummins L9 350} EPA 2017, 350HP @ 2000 RPM, 1000 lb-ft Torque @ 1400 RPM, 2200 RPM Governed Speed, 350 Peak HP (Max)
TRANSMISSION, AUTOMATIC:	{Allison 3000 RDS} 5th Generation Controls, Close Ratio, 6-Speed with Double Overdrive, with PTO Provision, Less Retarder, Includes Oil Level Sensor, On/Off Highway
CLUTCH:	Omit Item (Clutch & Control)
AXLE, FRONT NON-DRIVING:	{Meritor MFS-20-133A} Wide Track, I-Beam Type, 20,000-lb Capacity
AXLE, REAR, SINGLE:	{Meritor RS-23-160} Single Reduction, 23,000-lb Capacity, Driver Controlled Locking Differential, 200 Wheel Ends Gear Ratio: 6.14
CAB:	Conventional
TIRE, FRONT:	(2) 315/80R22.5 Load Range L HSC1 (CONTINENTAL), 484 rev/mile, 68 MPH, All-Position
TIRE, REAR:	(4) 11R22.5 Load Range H HDC1 (CONTINENTAL), 488 rev/mile, 75 MPH, Drive
SUSPENSION, REAR, AIR, SINGLE:	{Hendrickson PRIMAAX EX} 23,000-lb Capacity, 9.0" Ride Height, with Shock Absorbers
PAINT:	Cab schematic 100WK Location 1: 0311, Omaha Orange (Std) Chassis schematic N/A

Code	Description
HV50700	Base Chassis, Model HV507 SFA with 165.00 Wheelbase, 90.00 CA, and 79.00 Axle to Frame.
1570	TOW HOOK, FRONT (2) Frame Mounted
1ANA	AXLE CONFIGURATION {Navistar} 4x2
	Notes : Pricing may change if axle configuration is changed.
1CAJ	FRAME RAILS Heat Treated Alloy Steel (120,000 PSI Yield); 10.866" x 3.622" x 0.433" (276.0mm x 92.0mm x 11.1mm); 456.0" (11582mm) Maximum OAL
1LLA	BUMPER, FRONT Steel, Swept Back
1WDS	FRAME EXTENSION, FRONT Integral; 20" In Front of Grille
1WEV	WHEELBASE RANGE 146" (370cm) Through and Including 195" (495cm)
2ARY	AXLE, FRONT NON-DRIVING {Meritor MFS-20-133A} Wide Track, I-Beam Type, 20,000-lb Capacity
3AGA	SUSPENSION, FRONT, SPRING Parabolic, Taper Leaf; 20,000-lb Capacity; with Shock Absorbers
3WAJ	SPRINGS, FRONT AUXILIARY Air Bag, Right Side Only, Driver Control
4091	BRAKE SYSTEM, AIR Dual System for Straight Truck Applications
4193	BRAKES, FRONT, AIR CAM 16.5" x 6", Includes 24 Sqin Long Stroke Brake Chambers
4732	DRAIN VALVE {Berg} with Pull Chain, for Air Tank
4AZJ	AIR BRAKE ABS {Bendix AntiLock Brake System} Full Vehicle Wheel Control System (4-Channel) with Automatic Traction Control
4EBD	AIR DRYER {Wabco System Saver 1200} with Heater
4EXU	BRAKE CHAMBERS, REAR AXLE {Bendix EverSure} 30/30 Spring Brake
4EXV	BRAKE CHAMBERS, FRONT AXLE {Bendix} 24 Sqin
4JDC	AIR DRYER LOCATION Mounted Outside Left Rail, Back of Cab
4NDB	BRAKES, REAR, AIR CAM S-Cam; 16.5" x 7.0"; Includes 30/30 Sq.In. Long Stroke Brake Chamber and Spring Actuated Parking Brake
4SPA	AIR COMPRESSOR {Cummins} 18.7 CFM Capacity
4WBX	DUST SHIELDS, FRONT BRAKE for Air Brakes
4WDM	DUST SHIELDS, REAR BRAKE for Air Brakes
4WZJ	AIR TANK LOCATION (2) : One Mounted Under Each Frame Rail, Front of Rear Suspension, Parallel to Rail
5710	STEERING COLUMN Tilting and Telescoping
5CBE	STEERING WHEEL 4-Spoke; 18" Dia., Black Leather Wrapped
5PTB	STEERING GEAR (2) {Sheppard M100/M80} Dual Power
7BEU	AFTERTREATMENT COVER Aluminum
7BKS	EXHAUST SYSTEM Single Horizontal Aftertreatment Device, Frame Mounted Right Side Under Cab; for Single Vertical Tail Pipe, Frame Mounted Right Side Back of Cab
7WBA	TAIL PIPE (1) Turnback Type, Bright, for Single Exhaust
7WBS	MUFFLER/TAIL PIPE GUARD (1) Bright Stainless Steel
7WCM	EXHAUST HEIGHT 8' 10"

Code	Description
8000	ELECTRICAL SYSTEM 12-Volt, Standard Equipment
8695	SNOW SHIELD (2) Chrome; for Dual Air Horns
8899	JUMP START STUD (2) Remote Mounted
8GXD	ALTERNATOR {Leece-Neville AVI160P2013} Brush Type; 12 Volt 160 Amp. Capacity, Pad Mount, with Remote Sense
8HAB	BODY BUILDER WIRING Back of Standard or Sleeper Cab at Left Frame or Under Extended or Crew Cab at Left Frame; Includes Sealed Connectors for Tail/Amber Turn/Marker/ Backup/Accessory Power/Ground and Sealed Connector for Stop/Turn
8HXT	HORN, AIR (2) Single Tone, Chrome, Roof Mounted, with Lanyard Pull Cord
8MMG	BATTERY SYSTEM {Deka/EAST PENN 9A31 AGM} Maintenance-Free (3) AGM 12-Volt 2775CCA Total
8RGA	2-WAY RADIO Wiring Effects; Wiring with 20 Amp Fuse Protection, Includes Ignition Wire with 5 Amp Fuse, Wire Ends Heat Shrink and Routed to Center of Header Console in Cab
8RML	RADIO AM/FM/WB/Clock/Bluetooth/USB Input/3.5MM Auxiliary Input, MP3, Apple Device Play & Control, Bluetooth for Phone & Music
8RMZ	SPEAKERS (2) 6.5" Dual Cone Mounted in Both Doors, (2) 5.25" Dual Cone Mounted in Both B-Pillars
8THB	BACK-UP ALARM Electric, 102 dBA
8THJ	AUXILIARY HARNESS 3.0' for Auxiliary Front Head Lights and Turn Signals for Front Plow Applications
8TPR	STOP, TURN, TAIL & B/U LIGHTS {Weldon} LED Multi-Function Lamp, Mounted Outside Rails, Includes License Plate Light
8VAY	HORN, ELECTRIC Disc Style
8VZR	SWITCH, BODY CIRCUITS, MID for Bodybuilder, 6 Momentary Switches in Instrument Panel; One Power Module with 6 Channels, 20 Amp Max. Per Channel, 80 Amp Max Output, Switches Control Power Module Through Multiplex Wiring, Mounted in Cab Behind Driver Seat
8WGL	WINDSHIELD WIPER SPD CONTROL Force Wipers to Slowest Intermittent Speed When Park Brake Set and Wipers Left on for a Predetermined Time
8WNH	RUNNING LIGHT (2) Daytime
8WPH	CLEARANCE/MARKER LIGHTS (5) {Truck Lite} Amber LED Lights, Flush Mounted on Cab or Sunshade
8WPZ	TEST EXTERIOR LIGHTS Pre-Trip Inspection will Cycle all Exterior Lamps Except Back-up Lights
8WRB	HEADLIGHTS ON W/WIPERS Headlights Will Automatically Turn on if Windshield Wipers are turned on
8WTK	STARTING MOTOR {Delco Remy 38MT Type 300} 12 Volt; less Thermal Over-Crank Protection
8WWJ	INDICATOR, LOW COOLANT LEVEL with Audible Alarm
8WXD	ALARM, PARKING BRAKE Electric Horn Sounds in Repetitive Manner When Vehicle Park Brake is "NOT" Set, with Ignition "OFF" and any Door Opened
8XAH	CIRCUIT BREAKERS Manual-Reset (Main Panel) SAE Type III with Trip Indicators, Replaces All Fuses
8XDZ	BATTERY BOX Steel, Mounted Inside the Cab, Under Passenger Seat, 3 Battery Capacity
8XGT	TURN SIGNALS, FRONT Includes LED Side Turn Lights Mounted on Fender
8XHD	BATTERY DISCONNECT SWITCH 300 Amp; Cab Mounted, Disconnects Charging Circuits; Locks with Padlock
9585	FENDER EXTENSIONS Rubber
9AAB	LOGOS EXTERIOR Model Badges

Code	Description
9AAH	LOGOS EXTERIOR, ENGINE Badge Shipped Loose
9ANG	HOOD, HATCH (01) for Servicing
9HAN	INSULATION, UNDER HOOD for Sound Abatement
9HBM	GRILLE Stationary, Chrome
9HBN	INSULATION, SPLASH PANELS for Sound Abatement
9WBC	FRONT END Tilting, Fiberglass, with Three Piece Construction; for WorkStar/HV
10060	PAINT SCHEMATIC, PT-1 Single Color, Design 100
	Includes : PAINT SCHEMATIC ID LETTERS "WK"
10761	PAINT TYPE Base Coat/Clear Coat, 1-2 Tone
10943	KEYS - ALL ALIKE Fleet - Includes Ignition and Cab Door Keys
10AAY	OVER THE AIR PROGRAMMING {Navistar} for Cummins Engines
10BAE	LABEL, DEF "DEF ONLY"
10SLV	PROMOTIONAL PACKAGE Government Silver Package
10WCY	SAFETY TRIANGLES
10WKN	KEYS - ALL ALIKE, ID I-1624 Compatible with Z-250
11001	CLUTCH Omit Item (Clutch & Control)
12703	ANTI-FREEZE Red, Extended Life Coolant; To -40 Degrees F/ -40 Degrees C, Freeze Protection
12851	PTO EFFECTS, ENGINE FRONT Less PTO Unit, Includes Adapter Plate on Engine Front Mounted
12EHX	ENGINE, DIESEL {Cummins L9 350} EPA 2017, 350HP @ 2000 RPM, 1000 lb-ft Torque @ 1400 RPM, 2200 RPM Governed Speed, 350 Peak HP (Max)
12THT	FAN DRIVE {Horton Drivemaster} Direct Drive Type, Two Speed with Residual Torque Device for Disengaged Fan Speed
12UWZ	RADIATOR Cross Flow, Series System; 1228 Sqin Aluminum Radiator Core with Internal Water to Oil Transmission Cooler and 1167 In Charge Air Cooler
12VAG	AIR CLEANER Single Element, with Integral Snow Valve and In-Cab Control
12VGN	FEDERAL EMISSIONS {Cummins L9} EPA, OBD and GHG Certified for Calendar Year 2018
12VXT	THROTTLE, HAND CONTROL Engine Speed Control; Electronic, Stationary, Variable Speed; Mounted on Steering Wheel
12VYL	ACCESSORY WIRING, SPECIAL for Road Speed Wire Coiled Under Instrument Panel for Customer Use
12VYP	ENGINE CONTROL, REMOTE MOUNTED No Provision Furnished for Remote Mounted Engine Control
12WUL	BLOCK HEATER, ENGINE {Phillips} 120V/1000W, with "Y" Cord From Socket in Standard Location, For a Dealer Installed 120V/300W Max Oil Pan Heater
12WZE	EMISSION COMPLIANCE Federal, Does Not Comply with California Clean Air Idle Regulations
13AVR	TRANSMISSION, AUTOMATIC {Allison 3000 RDS} 5th Generation Controls, Close Ratio, 6-Speed with Double Overdrive, with PTO Provision, Less Retarder, Includes Oil Level Sensor, On/Off Highway
13WDZ	SHIFT CONTROL PARAMETERS Allison S-1 Performance Programming in Primary and Allison Fixed Programming in Secondary

Code	Description
13WET	TRANSMISSION SHIFT CONTROL for Column Mounted Stalk Shifter
13WLP	TRANSMISSION OIL Synthetic; 29 thru 42 Pints
13WUC	ALLISON SPARE INPUT/OUTPUT for Rugged Duty Series (RDS); General Purpose Trucks, Construction
13WYH	TRANSMISSION TCM LOCATION Located Inside Cab
13XAM	PTO LOCATION Dual, Left and Right Side of Transmission
14899	SUSPENSION AIR CONTROL VALVE Pressure Release Control In Cab
14ARB	AXLE, REAR, SINGLE {Meritor RS-23-160} Single Reduction, 23,000-lb Capacity, Driver Controlled Locking Differential, 200 Wheel Ends . Gear Ratio: 6.14
14TBZ	SUSPENSION, REAR, AIR, SINGLE {Hendrickson PRIMAAX EX} 23,000-lb Capacity, 9.0" Ride Height, with Shock Absorbers
14WMG	AXLE, REAR, LUBE {EmGard FE-75W-90} Synthetic Oil; 30 thru 39.99 Pints
15924	FUEL TANK STRAPS Bright Finish Stainless Steel
15LMA	LOCATION FUEL/WATER SEPARATOR Mounted Outside Left Rail, 15" Back of Cab
15LMN	FUEL/WATER SEPARATOR {Racor 400 Series,} 12 VDC Electric Heater, Includes Pre-Heater, with Primer Pump, Includes Water-in-Fuel Sensor
15SWE	FUEL TANK Top Draw, Non-Polished Aluminum, 26" Dia, 70 US Gal (265L), Mounted Left Side, Under Cab
15WDG	DEF TANK 7 U.S. Gal. 26.5L Capacity, Frame Mounted Outside Left Rail, Under Cab
16030	CAB Conventional
16564	HEATER SHUT-OFF VALVES (1) Ball Valve Type, Supply Line
16BAM	AIR CONDITIONER with Integral Heater & Defroster
16GDG	GAUGE CLUSTER Premium Level; English with English Speedometer and Tachometer, for Air Brake Chassis, Includes Engine Coolant Temperature, Primary and Secondary Air Pressure, Fuel and DEF Gauges, Oil Pressure Gauge, Includes 5 Inch LCD Color Display
16GHU	GRAB HANDLE, CAB INTERIOR (2) Safety Yellow
16HGH	GAUGE, OIL TEMP, AUTO TRANS for Allison Transmission
16HHE	GAUGE, AIR CLEANER RESTRICTION {Filter-Minder} with Black Bezel Mounted in Instrument Panel
16HKT	IP CLUSTER DISPLAY On Board Diagnostics Display of Fault Codes in Gauge Cluster
16JNV	SEAT, DRIVER {National 2000} Air Suspension, High Back with Integral Headrest, Cloth, Isolator, 1 Chamber Lumbar, 2 Position Front Cushion Adjust, -3 to +14 Degree Back Angle Adjust
16SEE	GRAB HANDLE Chrome; Towel Bar Type with Anti-Slip Rubber Inserts; for Cab Entry Mounted Left Side Only at "B" Pillar
16SJX	MIRROR, CONVEX, HOOD MOUNTED (2) {Lang Mekra} Bright, Heated, Left and Right Sides 7.44" Sq
16SMX	SEAT, PASSENGER {Seats, Inc.} Non Suspension, High Back, Fixed Back, Integral Headrest, Cloth, for use with Batteries in Cab
16SNV	MIRRORS (2) Aero; Pedestal, Power Adjust, Heated Heads, Turn Signals, Bright Finish Heads, Black Arms, 6.3" x 13.82" Flat Glass, 6.38" x 6.18" Convex Glass Both Sides
16VCC	SEAT BELT All Orange; 1 to 3
16VKK	CAB INTERIOR TRIM Diamond, for Day Cab
	Includes

Code	Description
	: CONSOLE, OVERHEAD Molded Plastic with Dual Storage Pockets, Retainer Nets and CB Radio Pocket; Located Above Driver and Passenger : DOME LIGHT, CAB Door Activated and Push On-Off at Light Lens, Timed Theater Dimming, Reading Lights; Integral to Overhead Console, Center Mounted : SUN VISOR (3) Padded Vinyl; 2 Moveable (Front-to-Side) Primary Visors, Driver Side with Vanity Mirror and Toll Ticket Strap, plus 1 Auxiliary Visor (Front Only), Driver Side
16VSL	WINDSHIELD Heated, Single Piece
16WBY	ARM REST, RIGHT, DRIVER SEAT
16WJU	WINDOW, POWER (2) and Power Door Locks, Left and Right Doors, Includes Express Down Feature
16WLS	FRESH AIR FILTER Attached to Air Intake Cover on Cowl Tray in Front of Windshield Under Hood
16WSK	CAB REAR SUSPENSION Air Bag Type
16XJP	INSTRUMENT PANEL Wing Panel
16XWE	SUNSHADE, EXTERIOR Bright Finish; Includes Integral Clearance/Marker Lights
16XXC	COWL TRAY LID
16ZBB	ACCESS, CAB {Bustin} Driver & Passenger Sides, Two Aluminum, Self-Cleaning Steps (Bustin) Per Door, For Use with Regular & Extended Cabs
27DUS	WHEELS, FRONT {Accuride 41730} DISC; 22.5x9.00 Rims, Polished Aluminum, 10-Stud, 285.75mm BC, Hub-Piloted, Flanged Nut, with Steel Hubs
28DMB	WHEELS, REAR DUAL DISC; 22.5x8.25 Rims, Non-Polished Aluminum, 10-Stud 285.75mm BC, Hub-Piloted, Flanged Nut, with Steel Hubs
7382135420	(4) TIRE, REAR 11R22.5 Load Range H HDC1 (CONTINENTAL), 488 rev/mile, 75 MPH, Drive
7792545419	(2) TIRE, FRONT 315/80R22.5 Load Range L HSC1 (CONTINENTAL), 484 rev/mile, 68 MPH, All-Position
	Services Section:
40128	WARRANTY Standard for HV507, HV50B, HV607 Models, Effective with Vehicles Built July 1, 2017 or Later, CTS-2025A
1	Monroe Truck Equipment - to supply body, plow, wing, and tailgate spreader $66,744
	Special Delivery Prep (Med)
	Stainless Steel Oil Pan
	Wing Camera

INTERNATIONAL®

Financial Summary
2019 HV507 SFA (HV507)

September 20, 2018

(US DOLLAR)

Description	Price
Net Sales Price:	$165,875.00

Please feel free to contact me regarding these specifications should your interests or needs change. I am confident you will be pleased with the quality and service of an International vehicle.

Approved by Seller:

Official Title and Date

Authorized Signature

This proposal is not binding upon the seller without Seller's Authorized Signature

Accepted by Purchaser:

Firm or Business Name

Authorized Signature and Date

Official Title and Date

The TOPS FET calculation is an estimate for reference purposes only. The seller or retailer is responsible for calculating and reporting/paying appropriate FET to the IRS.

Monroe Truck Equipment
1151 W Main Avenue
DePere, WI 54115
Ph./Fax: 920-347-4185/920-336-8118
www.MonroeTruck.com

Sourcewell
Awarded Contract
#080114-MTE

MVP
NTEA MEMBER VERIFICATION PROGRAM

QUOTATION
2BAS000387

Job Order #:	
Quote Date:	8/29/2018
Quote valid until:	9/28/2018
Terms:	NET 30
Salesperson:	HAWKINS, MAX (MUNI)
Quoted by:	Brian Salentine
Email:	bsalentine@monroetruck.com

Customer: LAKE GENEVA, CITY OF
626 GENEVA ST
LAKE GENEVA, WI 53147

Contact:
Phone: 262-248-3673 **Fax:** 262-248-4715
Email:

Dealer Code:
Sourcewell Member #:
P.O. Number: ROB

Re-Assign *(Required for all pool units)*: ☐ **Fleet** ☐ **Retail**
MSO/MCO *(ONLY check if legally required)*: ☐ **MSO** ☐ **MCO**

Accepted by: _____ **Date:** _____
Customer must fill out all information above before the order can be processed.

Chassis Information

Year:	***Make:***		***Model:***		***Chassis Color:***	***Cab Type:***
Single/Dual:	***CA:***	***CT:***	***Wheelbase:***	***Engine:***	***F.O. Number #:***	***Vin:***

Comments: CITY OF LAKE GENEVA

Monroe Truck Equipment, Inc. is pleased to offer the following quote for your review:

Description **Amount**

10' CRYSTEEL SELECT STEEL DUMP BODY
- STAINLESS STEEL CONSTRUCTION
- 10' x 84" ID x 96" OD
- 1/2" x 10 ga 78" CABSHIELD, 100% WELDED
- 48" STRAIGHT FRONT MADE OF 7 GA STAINLESS STEEL
- 26" SIDES MADE OF 7 GA STAINLESS STEEL
- SINGLE PANEL SIDES
- ALL TAILGATE HARDWARE UNDER THE FLOOR IS STAINLESS STEEL
- 36" STRAIGHT REAR MADE OF 7 GA STAINLESS STEEL
- STAINLESS STEEL REAR PILLAR / PILLAR CAP / RUBRAIL
- 9 WESTERN TUBULAR FRAME MADE OF 1/4 A1011 STEEL
- 3/16 AR400 STEEL FLOOR
- AIR TAILGATE RELEASE
- (2) BODY PROPS
* (2) STAINLESS STEEL SPRING LOADED SHOVEL HOLDERS
* GRAB HANDLE
* 2" FLAT WALK RAIL - BOTH SIDES
* (2) OVALS LIGHT HOLES IN REAR POSTS (S/T/T & STROBES)
- RUBBER MOUNTED RECESSED S/T/T W/ WEATHER RESISTANT WIRING HARNESS & JUNCTION BOX
- FMVSS 108 LIGHTS AND REFLECTORS
- DC3200 COUGAR VIBRATOR
- BARE STAINLESS STEEL
- FLEET-LINE POLY FENDERS OVER REAR DRIVES W/SHORT FLAPS

10' RC750 SUBFRAME HOIST
- ROLLER-COMBO UNDERBODY SUBFRAME HOIST
- GREASEABLE REAR HINGE
- BODY UP LIGHT
- (2) BODY PROPS
- CYLINDERS MADE FROM HIGH STRENGTH STEEL TUBING AND FEATURES CHROMED SHAFTS

TOWING:
- 1/2" PINTLE PLATE
- (2) D-RINGS
- 2" RECEIVER TUBE BELOW PINTLE HOOK
- PH-15 PINTLE HOOK - 15 TON
- 7-WAY ROUND TRAILER PLUG - FLAT SPLIT PIN
- ELECTRIC BRAKE CONTROL
- ELECTRIC BACK-UP ALARM

Description	Amount

MTE TRUCK PORTION PLOW HITCH
- MC6000 QUICK COMPATIBLE
- FOLD FLAT LIFT ARM
* 4X10 DA LIFT CYLINDER
- CUT AND REINSTALL BUMPER
- P/C BLACK

MONROE FULL MOLDBOARD TRIP REVERSIBLE PLOW
- MP41R11-ISCT
- 10 GAUGE ROLL FORMED STRAIGHT MOLDBOARD
- (6) 1/2" X 4" TAPERED, ONE-PIECE FLAME CUT RIBS
- 2" X 3" X 3/8" TOP MOLDBOARD ANGLE
- 4" X 4" X 3/4" BOTTOM MOLDBOARD ANGLE
- HORIZONTAL MOLDBOARD BRACE ANGLES
* CARBIDE CUTTING EDGES WITH COVER PLATE
- DUAL COMPRESSION TRIP SPRING ASSEMBLIES
- 4" X 4" X 3/8" CROSS-TUBE SUPPORT
- 3-1/2" X 3-1/2" X 1/2" SEMI-CIRCLE
- (2) 3" X 10" DOUBLE ACTING POWER REVERSE CYLINDERS WITH CUSHION VALVE
- BUILT-IN MONROE LEVEL LIFT ASSEMBLY
- MOLDBOARD AND PUSHFRAME 100% CONTINUOUSLY WELDED
* MC6000 QUICK HITCH FOR PLOW SIDE
* RUBBER SNOW DEFLECTOR, INSTALLED
* PARKING JACK, INSTALLED
* (2) 36" FLUORESCENT ORANGE MARKERS
* "WINTER" POST STYLE CURB RUNNERS WITH CARBIDE
- NO SHOES
- MOLDBOARD POWDER COATED ORANGE
- PUSH FRAME POWDER COATED BLACK
- INSTALLED

MONROE UNDER-TAILGATE SPREADER
- DIRECT DRIVE
- 7 GA. TROUGH
- 1/4" END PLATES
- FULL OPENING TOP AND BOTTOM CLEAN-OUT DOORS
- 6" AUGER DIAMETER
- DUAL DISCHARGE
- QUICK DETACH MOUNTING BRACKETS
- TAILGATE SHIELDS
- BARE STAINLESS STEEL FINISH
* SELF-LEVELING POLY SPINNER DISC W/ STAINLESS STEEL FRAME
* L.E.D. LIGHT BAR KIT - S,T,T AND MARKER
* SPEED SENSOR FOR CLOSED LOOP AUGER OPERATION
- INSTALLED

MONROE TRUCK HYDRAULICS SYSTEM
- 4.5 CI FRONT MOUNTED PUMP
- HIGH PRESSURE SHUT-OFF BALL VALVE
- 30 GAL SLIM LINE STAINLESS STEEL OIL RESERVOIR
- STAINLESS STEEL VALVE ENCLOSURE
- VALVING TO OPERATE: D/A HOIST, D/A PLOW LIFT, D/A PLOW ANGLE, WING TOE, WING HEEL, AUGER, SPINER
- MANUAL VALVE CONTROLS TO OPERATE HOIST, PLOW AND WING
- 2 BUTTON CONTROL FOR SPREADER ON/OFF - BLAST
- ELECTRIC FORCE AMERICA 5100EX STAND ALONE SPREADER CONTROLLER
- CLOSED LOOP WIRING AND AUGER SENSOR
- WING AND SPREADER MANIFOLD
- HOSES & FITTINGS
- STAINLESS STEEL LINES WITH SHOT WIP HOSES FOR PLOW, WING AND SPREADER FUNCTIONS
- INSTALLED

LIGHTING:
- HELLA PLOW LIGHTS MOUNTED ON STAINLESS STEEL BRACKETS ON FACTORY HOOD MIRRORS
- LED STROBE LIGHT MOUNTED ON SELF-LEVELING BRACKET
- L.E.D. SELF CONTAINED 2 LIGHT STROBE SYSTEM RECESSED IN REAR POSTS
- L.E.D. BODY LIGHTING UPGRADE
- TWO (2) STOP, TURN & TAIL LAMPS
- FIVE (5) RED MARKER LAMPS
- AMBER SPREADER LIGHT
- CLEAR WING LIGHT
- BRIGADE, 7" MONITOR, 3 PORT ULTRA CAMERA, 66' CABLE

Quote Total: $53,956.00

Additional Options:

Description	Amount	Add to quote?
8' MONROE, DOUBLE FUNCTION, STRAIGHT, TRIP-EDGE, PATROL WING (RIGHT SIDE) - 35" HIGH STRAIGHT - 3/16" THICK MOLDBOARD - 4" X 4" X ¾", A36 STEEL, BOTTOM ANGLE W/ 1" THICK WELDED TRIP HINGE BLOCKS - TOP OF BOTTOM ANGLE BOXED TO THE MOLDBOARD W/ ¼" PLATE FOR ADDITIONAL STRENGTH - ½" THICK ONE-PIECE VERTICAL & INTERLACED DESIGNED HORIZONTAL RIBS - MAILBOX TRIM ON DISCHARGE END - STANDARD 100% WELDED - TRIP SECTION ANGLE ASSEMBLY: 3/4" X 3" X 4", A36 STEEL W/ ¾" THICK TRIP HINGE BLOCKS - ANGLES PIVOT ON 1-1/4" COLD ROLLED, 1040 STEEL HELD IN PLACE BY ¼" X 2" EXPANSION PINS - (6) ¾" SQUARE WIRE TORSION SPRINGS W/ 3-3/4" OUTSIDE DIAMETER & 11" COILS * CARBIDE CUTTING EDGES WITH COVER PLATE * SINGLE HEAVY DUTY PUSH ARM * DECELL CYLINDER - FRONT HEEL LIFT * "WINTER" POST STYLE CURB RUNNER WITH CARBIDE - WING HEEL * WING LOCKS - TOE AND HEEL * HEEL AND TOE INDICATORS * CLEAR WING LIGHT - SHOT BLASTED & POWDER COATED ORANGE - POWDER COATED BLACK HARDWARE - INSTALLED	$12,097.00	Yes / No

Notes:

- Terms are Due Upon Receipt unless prior credit arrangements are made at the time of order.
- Please note if chassis is furnished, it is as a convenience and terms are Net Due on Receipt of Chassis.
- State and Federal taxes will be added where applicable. **Out-of-state municipal entities may be subject to Wisconsin sales tax.**
- Restocking fees may be applicable for cancelled orders.
- MTE Is not responsible or liable for equipment that does not meet local/state regulations if those laws are not made known at time of order.

equipment				budget		actual		above	below			
2016												
Field groomer				16000		16410.5	half=8205.25		8205.25			
2016 IH 5yd plow with wing				170000		157067.3			12931.74			
2016 IH 5yd plow with wing				165000		157067.3			7932.74			
2016 Chev 1-ton				55000		58865.36		3865.36				
bucket truck, F550				45000		38999.98			6000.02			
Leaf vac 1				65000		55562			9438			
Leaf vac 2				65000		55562			9438			
2017												
JD5085 side mower				75000		70160.96			4839.04			
Toro WAM, Vets				80000		76844.98			3155.02			
Scag tiger cat				12000		11798			202			
Cat 430FIT backhoe				70000		98250		28250				
2018												
JD 850, Vets				26000		25057.47			942.53			
Monsoon sweeper*				285000		253054			31946	Not delivered as of sept 2018		
	*Because of dual-role, can eliminate pelican replacement in 2029								*200000			
Forklift				17000								
	Also added apx $55,000.00 to fund from auction proceeds of replaced equipment.											
								32115.36	95030.34			
									*with sweeper delete=		295030.3	
								32115.36	295030.3			
										total 262914.98		surplus

Downtown Ice Rink

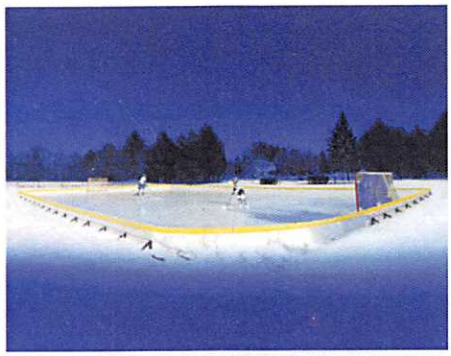

Placing an ice rink downtown Lake Geneva will create an opportunity for residents, visitors, kids, families, grandparents and many more to make new memories in Lake Geneva. Providing a space, with a free activity, that is open for 120 days of the year, in the dead of winter! It will get people out of their houses, enjoying downtown.

The ice rink would be placed in Flat Iron Park. This park provides a beautiful background and is a centrally located public space.

Our plan includes the BID taking all of the risk in year one and asking the city for their involvement in each year after. I researched five other communities with ice rinks and 100% of them are paid for by their respective cities.

The ice rink with be purchased from Nice Rink, a family-owned company located in Genoa City. A breakdown of the budget/costs is noted below. We are purchasing the rink, so costs after year one significantly decrease.

The cost of the rink breaks down to four main categories: liners, brackets, re-surfacer, side boards. After year one, it is recommended (but not mandatory) that you purchase a new liner. Everything else is at zero costs since we will already
own it.

Ice Rink Cost Estimate		
Rink – 40' x 80'	$4,030.64	
SOD	$1,200.00	$.40/sq. ft.
Maintenance	$3,000.00	2x M-F and Sat and Sun = 4 times/week x 15 weeks (60 times) - $25/hour. 2 hours each time. Open weeks: 11/19 - 3/1
Lights	$1,200.00	
Boy Scout Donation	$500.00	If we can use their Christmas Tree huts for skates
Installation	$500.00	
	$10,430.64	

2018 Costs	
Rink	$4,030.64
Maintenance	$1,200.00
Installation	$500.00
	$5,730.64

2019 Costs	
Sod	$1,200.00
Maintenance	$1,800.00
Replacement Liner	$775.00
Boy Scouts Donation	$500.00
	$4,275.00

Previous issues discussed with having an ice rink have been the grading of the park and the re-growth of grass. The BID has met with the Streets department multiple times regarding this project and has also consulted the owner of Nice Rink with all questions and objections.

Addressing the grade: the owner and President of Nice Rink has verified that the grade of Flat Iron Park will not be an issue.

Addressing the re-growth of grass: In the case that the grass will not have appropriate time to re-grow in time for Memorial Day weekend, the BID has budgeted money for replacement sod for Flat Iron Park.

Since Lake Geneva does not have a sporting goods store, we intend to hold a 'skate drive' and ask people to donate ice skates. Since the skates will be donated, we will be able to offer free rentals to those needing skates. The intention is to offer non-profits the opportunity to staff the skate rental hut and keep any donations they receive.

On the days that the skate rental hut is not open, the rink will still be accessible with a "skate at your own risk" policy.

Thank you for your consideration in bringing an ice rink to Lake Geneva!

Water Safety Patrol

Geneva Lake Water Safety Committee, Inc., est. 1920
P.O. Box 548; 451 Outing St., Williams Bay, WI 53191
Phone: 262-245-6577; Fax: 262-245-6640
e-mail: wspatrol@sbcglobal.net; web: watersafetypatrol.org

Lifeguard Services Agreement for the 2019 Summer Season

The **Geneva Lake Water Safety Patrol** agrees to provide services to the **City of Lake Geneva** based on the following description:

Service Description and Dates of Service:

***REGULAR SEASON:** Three lifeguards (overlapping shifts) on weekdays and four lifeguards (overlapping shifts) on weekends/holidays from **June 1** through **Aug. 25.** Hours of coverage: **9:30am to 6:00pm (10:00am to 5:00pm after Aug. 18).**

***PEAK SEASON:** A fifth lifeguard to be added on weekends/holidays for the dates of **June 22-Aug. 4.**

***EARLY & LATE SEASON:** Three lifeguards (overlapping shifts) on weekends for the dates of **May 25-27 (Memorial Day) and Aug. 31-Sept. 2 (Labor Day).** Hours of coverage: **10:00 am to 5:00pm.**

Weather: In cases of dangerous, questionable, rainy or cold weather conditions, the lifeguard(s) may be dismissed early or temporarily at the discretion of the Water Safety Patrol management. Also, if the Beach management closes down the beach house, the lifeguards may be dismissed. A "Swim at Your Own Risk" policy is in effect whenever lifeguards are not present on the beach, and the city of Lake Geneva is responsible for posting signs to that effect.

Training, Boat Crew back-up, etc: Water Safety Patrol to provide back-up emergency services with its Boat Patrol. Lifeguards will be able to activate emergency protocol through two-way radios connected in with Water Safety Patrol dispatchers and Boat Patrol.
Training will be conducted throughout the summer both on the beach and at Water Safety Patrol Headquarters. Emergency practice drills will be conducted regularly by Water Safety Patrol management, and lifeguards will be tested on use of emergency equipment, etc.
Lifeguards are to fill out reports for any rescues, pull-outs, or significant injuries.

Costs for services described above:

Lifeguard Services for the above dates……..$26,170.00
Liability Insurance……..$3885.00
Workman's Compensation……..$ 595.00
Uniforms……..$ 555.00
First-Aid Supplies……$ 360.00
Swimming Lessons……..$4160.00
New megaphone……..……...$ 85.00

Total: $35,810.00

Payment: Payment due by July15, 2019

Authorized Signatures:

City of Lake Geneva:_____date:_____

Print:_____title:_____

Water Safety Patrol: _____date:_____
Ted Pankau, Director

Please return signed agreement to Water Safety Patrol by Dec. 15, 2018

CITY OF LAKE GENEVA
TREASURER'S REPORT - BALANCES BY INSTITUTION
9/30/2018

Institution	Account Name	Balances 9/30/2018
Cash on Hand	Cash Drawer-Change Bank	200.00
	Municipal Court-Petty Cash	50.00
	Police-Petty Cash	150.00
	Police-Cash Drawer	175.00
	Police-Bond Change Fund	500.00
	Launch Ramp Change Fund	100.00
	Beach Change Fund	-
	Parking-Petty Cash	120.00
	Library-Petty Cash	500.00
		1,795.00
First National Bank	General Fund Checking	287,196.58
	Donations Checking	667.22
	Police Seizure Account	600.59
	Parking Fund Checking	110,009.00
		398,473.39
Local Government Investment Pool	Investment Pool #1-General	9,179,861.60
	Investment Pool #4-Tax	620.86
	Investment Pool #5 - Park Impact Fees	66,658.77
	Investment Pool #6 - Fire Impact Fees	263.10
	Investment Pool #7 - Library Impact Fees	16,036.93
	Investment Pool #8 - Equip Replacement	2,128,617.47
	Investment Pool #9 - Library	98,044.27
	Investment Pool #11 - Capital Projects	2,061.79
		11,492,164.79
US Bank	Tax Checking	6,269.00
Edward Jones	Cemetery Perpetual Care	640,172.09
BMO Harris	Donations Checking	34,535.60
Voyager Capital Management	Investments-Building Fund	154,500.95
	Investments-Swanson Fund	140,514.81
	Investments-Special Projects	138,110.11
	Investments-Voyager Fund	30,622.53
		463,748.40
	Total Cash and Investments	13,037,158.27

CITY OF LAKE GENEVA
TREASURER'S REPORT - BALANCES BY FUND
9/30/2018

Institution	Account Name	Balances 9/30/2018
General Fund	Cash Drawer-Change Bank	200.00
	General Checking-shared cash	287,196.58
	Donations Checking	667.22
	Investment Pool #1-shared	8,972,478.92
	Investment Pool #4	620.86
	Municipal Court-Petty Cash	50.00
	Police-Petty Cash	150.00
	Police-Cash Drawer	175.00
	Police-Bond-Change Fund	500.00
	Police Seizure Account	600.59
		9,262,639.17
Debt Service	Investment Pool #1-shared	72,382.68
Lakefront	Launch Ramp Change Fund	100.00
	Beach Change Fund	-
		100.00
Parking	Parking Fund Checking	110,009.00
	Parking-Petty Cash	120.00
		110,129.00
Capital Projects	Investment Pool #11	2,061.79
Impact Fees	Investment Pool #5	66,658.77
	Investment Pool #6	263.10
	Investment Pool #10	16,036.93
		82,958.80
Cemetery	Investment Pool #1-shared	135,000.00
Cemetery Perpetual Care	Cemetery Pepetual Care-Edward Jones	640,172.09
Equip Replacement	Investment Pool #8	2,128,617.47
Tax Agency Fund	Tax Checking Account	6,269.00
Library Operating	Library-Petty Cash	500.00
Library Investments	Investment Pool #9	98,044.27
	Library Donations	34,535.60
	Investments-Building Fund	154,500.95
	Investments-Swanson Fund	140,514.81
	Investments-Special Projects	138,110.11
	Investments-Voyager Fund	30,622.53
		596,328.27
	Total Cash and Investments	13,037,158.27

Account Number	Account Title	2018-18 Period Actual	2018-18 Current year Actual	Current year Budget	Variance Current year	% of Budget
GENERAL FUND						
GENERAL FUND						
GENERAL FUND						
11-00-00-41110	GENERAL PROPERTY TAXES	.00	4,826,328.28	4,826,325.00	3.28-	100.00
11-00-00-41120	TID #4 INCREMENT-CLOSING REV	.00	.00	.00	.00	.00
11-00-00-41130	OMITTED & MISC TAX REVENUE	.00	222.36	.00	222.36-	.00
11-00-00-41140	MOBILE HOME PARK FEES	64.55	5,308.62	4,920.00	388.62-	107.90
11-00-00-41150	PERSONAL PROPERTY TAXES	.00	.00	.00	.00	.00
11-00-00-41210	ROOM TAX	66,942.44	424,604.97	375,679.00	48,925.97-	113.02
11-00-00-41220	SALES TAX DISCOUNT	50.07	572.50	400.00	172.50-	143.13
11-00-00-41310	TAXES FROM WATER UTILITY	26,875.00	241,542.00	324,000.00	82,458.00	74.55
11-00-00-41800	INT & PENALTY ON TAXES	221.43	2,545.30	1,000.00	1,545.30-	254.53
11-00-00-41810	ROOM TAX LATE FEES	.00	13.18	.00	13.18-	.00
11-00-00-41820	ROOM TAX INTEREST	.00	.00	.00	.00	.00
11-00-00-42620	SPEC ASSMTS-CURB & GUTTER	.00	719.81	7,200.00	6,480.19	10.00
11-00-00-43400	MUNICIPAL RECYCLING GRANT	.00	23,762.92	23,700.00	62.92-	100.27
11-00-00-43410	STATE SHARED REVENUE	.00	16,512.03	110,080.00	93,567.97	15.00
11-00-00-43430	EXPENDITURE RESTRAINT PROGRA	.00	.00	.00	.00	.00
11-00-00-43530	STATE AID FOR HIGHWAYS	.00	720,550.60	721,084.00	533.40	99.93
11-00-00-43540	OTHER STATE GRANTS	.00	.00	.00	.00	.00
11-00-00-43600	PYMT MUNI SERVICES-CONSERVATN	.00	3,492.17	3,565.00	72.83	97.96
11-00-00-43610	STATE COMPUTER AID	.00	18,750.64	18,000.00	750.64-	104.17
11-00-00-43620	AIDS IN LIEU OF TAXES-PILOT	.00	173.32	10,170.00	9,996.68	1.70
11-00-00-43670	LOTTERY CREDIT	.00	.00	.00	.00	.00
11-00-00-43680	GLLEA ACCOUNTING SERVICES	.00	.00	.00	.00	.00
11-00-00-43690	FEMA DISASTER AID & RELIEF	.00	.00	.00	.00	.00
11-00-00-44100	LIQUOR & MALT BEVERAGE LICENSE	.00	31,227.50	32,000.00	772.50	97.59
11-00-00-44110	OPERATOR LICENSES	425.00	16,435.00	17,500.00	1,065.00	93.91
11-00-00-44120	BUS LIC-CIG,MILK,VID,WEIGHTS	200.00	15,565.00	18,800.00	3,235.00	82.79
11-00-00-44130	PERMITS-SELLERS,ALARM,ROOM	40.00-	7,875.00	6,000.00	1,875.00-	131.25
11-00-00-44140	PERMITS-SHORT TERM RENTALS	.00	6,000.00	.00	6,000.00-	.00
11-00-00-44150	CABLE TV FRANCHISE FEES	.00	64,996.59	108,000.00	43,003.41	60.18
11-00-00-44200	NONBUS LIC-DOGS/CATS	42.00	2,016.00	1,000.00	1,016.00-	201.60
11-00-00-44250	OTHER LICENSES & FEES	25.00-	8,160.00	8,000.00	160.00-	102.00
11-00-00-44900	WORK PERMITS	12.50	227.50	560.00	332.50	40.63
11-00-00-44950	OTHER PERMITS	.00	1,795.00	1,500.00	295.00-	119.67
11-00-00-45100	ANNEXATION FILING FEES	.00	.00	.00	.00	.00
11-00-00-45220	RESTITUTION	.00	.00	.00	.00	.00
11-00-00-46000	CASH DRAWER OVERAGES/UNDERA	.20	97.06-	.00	97.06	.00
11-00-00-46100	GENERAL GOV'T MISC REVENUE	164.85	2,038.49	2,000.00	38.49-	101.92
11-00-00-46110	SPECIAL ASSMT LETTERS FEES	1,065.00	8,495.00	9,500.00	1,005.00	89.42
11-00-00-46900	MISCELLANEOUS SALES	9.48	189.59	.00	189.59-	.00
11-00-00-47300	DONATIONS	.00	.00	.00	.00	.00
11-00-00-47900	INTDEPART CHGS FOR SVC UTILITY	.00	.00	.00	.00	.00
11-00-00-48110	INTEREST INCOME	15,490.75	116,879.51	20,000.00	96,879.51-	584.40
11-00-00-48120	A/R FINANCE CHARGES	.00	3.10-	700.00	703.10	.44-
11-00-00-48130	INTEREST ON SPECIAL ASSESSMEN	13.00	222.13	144.00	78.13-	154.26
11-00-00-48190	DISCOUNTS EARNED	16.00	221.36	250.00	28.64	88.54
11-00-00-48300	SALE OF CITY EQUIPMENT	.00	.00	.00	.00	.00
11-00-00-48320	SALE OF CITY REAL ESTATE	.00	.00	.00	.00	.00
11-00-00-48350	ROOM RENTAL FEES	.00	.00	1.00	1.00	.00
11-00-00-48370	HILLMOOR LEASE	.00	.00	.00	.00	.00
11-00-00-48400	INSURANCE REIMBURSEMENTS	18,982.42	30,794.56	30,000.00	794.56-	102.65
11-00-00-48450	INSURANCE REBATE-LEAGUE	.00	18,427.00	10,000.00	8,427.00-	184.27
11-00-00-48510	OTHER PARK DONATIONS	.00	.00	.00	.00	.00

Account Number	Account Title	2018-18 Period Actual	2018-18 Current year Actual	Current year Budget	Variance Current year	% of Budget
11-00-00-49000	PROCEEDS FROM BORROWING	.00	.00	.00	.00	.00
11-00-00-49100	APPL.PRIOR YRS APPROPRIATION	.00	.00	.00	.00	.00
11-00-00-49200	DEBT SERVICE REIMBURSEMENT	.00	.00	.00	.00	.00
11-00-00-49220	TID ADMIN REIMBURSEMENT	.00	.00	.00	.00	.00
11-00-00-49300	TRANSFER FROM LAKEFRONT	.00	.00	526,286.00	526,286.00	.00
11-00-00-49400	TRANSFER FROM UTILTIY	.00	.00	154,678.00	154,678.00	.00
11-00-00-49500	REVENUE FROM PARKING FUND	.00	.00	901,787.00	901,787.00	.00
11-00-00-49610	TRANSFER FROM LAKEFRONT RES	.00	.00	.00	.00	.00
Total GENERAL FUND:		130,509.69	6,616,563.77	8,274,829.00	1,658,265.23	79.96
Total GENERAL FUND:		130,509.69	6,616,563.77	8,274,829.00	1,658,265.23	79.96
GENERAL GOVERNMENT						
GENERAL GOVERNMENT						
11-10-00-51330	LIFE INSURANCE POLICY FEES	143.38	1,369.04	1,850.00	480.96	74.00
11-10-00-51390	HOLIDAY APPRECIATION	.00	.00	.00	.00	.00
11-10-00-51540	UNEMPLOYMENT COMPENSATION	.00	5,081.60	6,000.00	918.40	84.69
11-10-00-52140	LABOR NEGOTIATIONS	.00	.00	.00	.00	.00
11-10-00-52160	OFFICIAL MAP	.00	.00	.00	.00	.00
11-10-00-52450	EXPENSES SUBJECT TO INS CLAIM	836.40	32,360.26	10,000.00	22,360.26-	323.60
11-10-00-53140	OFFICIAL PUBLICATIONS & NOTICE	361.62	4,753.00	12,000.00	7,247.00	39.61
11-10-00-53150	PUBLICATION FEES REIMBURSABLE	44.64	1,713.33	2,100.00	386.67	81.59
11-10-00-53160	RECORDING FEES	.00	30.00	100.00	70.00	30.00
11-10-00-53980	BANK CHARGES	.00	1,130.67	910.00	220.67-	124.25
11-10-00-53990	GENERAL GOV'T MISC EXPENSES	.00	33.00	250.00	217.00	13.20
11-10-00-57300	SPECIAL LITIGATIONS	.00	437.50	.00	437.50-	.00
11-10-00-57400	PERSONAL PROPERTY WRITEOFFS	.00	2,783.52	1,000.00	1,783.52-	278.35
11-10-00-57410	ILLEGAL TAXES & REFUNDS	784.08	3,265.65	.00	3,265.65-	.00
11-10-00-57420	P.P. WRITE-OFFS REIMBURSED	.00	.00	.00	.00	.00
11-10-00-57800	CONTINGENCY ACCOUNT	.00	24.00	192,093.00	192,069.00	.01
11-10-00-59100	PURCHASE OF REAL ESTATE	.00	.00	.00	.00	.00
11-10-00-59200	TRANSFER TO CEMETERY FUND	.00	.00	.00	.00	.00
11-10-00-59300	TRANSFER TO DEBT SERVICE	.00	.00	.00	.00	.00
11-10-00-59400	TRANSFER TO CAPITAL FUND	.00	.00	.00	.00	.00
11-10-00-59500	TRANSFER TO LIBRARY FUND	.00	.00	.00	.00	.00
11-10-00-59600	TRANSFER TO EQUIP REPLACEMENT	.00	.00	.00	.00	.00
Total GENERAL GOVERNMENT:		2,170.12	52,981.57	226,303.00	173,321.43	23.41
INSURANCE						
11-10-10-55090	INS REIMB-OTHER DEPTS	.00	63,160.31-	91,000.00-	27,839.69-	69.41
11-10-10-55120	GENERAL LIABILITY INSURANCE	.00	131,464.77	174,879.00	43,414.23	75.17
11-10-10-55130	BOILER & MACHINERY INS	.00	405.31	.00	405.31-	.00
11-10-10-55160	WORKERS COMPENSATION	.00	115,289.00	154,500.00	39,211.00	74.62
Total INSURANCE:		.00	183,998.77	238,379.00	54,380.23	77.19
HEALTH INSURANCE						
11-10-20-51110	HEALTH & DENTAL REIMBURSABLE	53,304.72-	494,445.52-	630,000.00-	135,554.48-	78.48
11-10-20-51120	HEALTH REIMBURSE-EMPLOYEE	9,779.96-	48,447.23-	.00	48,447.23	.00
11-10-20-51320	HEALTH AND DENTAL ADMIN CHGS	58,315.27	467,350.57	630,000.00	162,649.43	74.18
11-10-20-51330	HEALTH AND DENTAL CLAIMS	136,122.96	857,743.57	1,500,000.00	642,256.43	57.18
11-10-20-51335	HEALTH INSURANCE PREMIUMS	.00	.00	.00	.00	.00
11-10-20-51340	DISABILITY PREMIUMS CITY	374.09	8,914.15	11,500.00	2,585.85	77.51
11-10-20-51350	EAP PROGRAM	.00	3,750.00	3,800.00	50.00	98.68

Account Number	Account Title	2018-18 Period Actual	2018-18 Current year Actual	Current year Budget	Variance Current year	% of Budget
11-10-20-51520	OPT OUT SOCIAL SECURITY EXP	445.97	2,824.75	3,800.00	975.25	74.34
Total HEALTH INSURANCE:		132,173.61	797,690.29	1,519,100.00	721,409.71	52.51
Total GENERAL GOVERNMENT:		134,343.73	1,034,670.63	1,983,782.00	949,111.37	52.16
COMMON COUNCIL						
COMMON COUNCIL						
11-11-00-51140	COUNCIL SALARIES	2,109.78	24,462.15	32,000.00	7,537.85	76.44
11-11-00-51200	PART TIME WAGES	57.41	1,178.46	1,615.00	436.54	72.97
11-11-00-51520	COUNCIL SOCIAL SECURITY	165.78	1,961.50	2,572.00	610.50	76.26
11-11-00-52140	VIDEOTAPING EXPENSES	.00	13.40	.00	13.40-	.00
11-11-00-53100	COMPUTER & OFFICE SUPPLIES	.00	.00	.00	.00	.00
11-11-00-53200	COUNCIL WIS LEAGUE MEMBERSHIP	.00	3,595.98	3,527.00	68.98-	101.96
11-11-00-53310	COUNCIL MEALS & LODGING	.00	.00	500.00	500.00	.00
11-11-00-53320	COUNCIL CONFERENCES & SCHOOL	.00	170.00	600.00	430.00	28.33
11-11-00-53990	COUNCIL MISCELLANEOUS EXPENSE	11.00	1,175.84	8,000.00	6,824.16	14.70
Total COMMON COUNCIL:		2,343.97	32,557.33	48,814.00	16,256.67	66.70
Total COMMON COUNCIL:		2,343.97	32,557.33	48,814.00	16,256.67	66.70
MUNICIPAL COURT						
MUNICIPAL COURT						
11-12-00-45100	COURT PENALTIES & FINES	21,272.94	105,835.62	110,000.00	4,164.38	96.21
11-12-00-45120	CIRCUIT COURT FORFEITURES	.00	.00	.00	.00	.00
11-12-00-45130	PARKING CITATION COLLECTIONS	669.92	11,472.20	6,000.00	5,472.20-	191.20
11-12-00-45140	COURT CITATION COLLECTN-STARK	.00	430.98	50.00	380.98-	861.96
11-12-00-46400	REIMBURSEMENTS BY DEFENDANTS	.00	188.44	150.00	38.44-	125.63
11-12-00-48110	MUNICIPAL CT INTEREST INCOME	.00	.00	.00	.00	.00
Total MUNICIPAL COURT:		21,942.86	117,927.24	116,200.00	1,727.24-	101.49
MUNICIPAL COURT						
11-12-00-51140	MUNICIPAL COURT SALARIES	1,644.75	10,965.00	14,255.00	3,290.00	76.92
11-12-00-51200	MUNICIPAL COURT WAGES-CLERK	7,081.81	44,885.43	61,787.00	16,901.57	72.65
11-12-00-51250	MUNICIPAL CT OVERTIME	.00	.00	.00	.00	.00
11-12-00-51330	INSURANCE DEDUCTIBLE REIMB	.00	.00	.00	.00	.00
11-12-00-51340	MUNICIPAL CT LIFE INSURANCE	17.74	134.26	127.00	7.26-	105.72
11-12-00-51345	MUNICIPAL CT HEALTH INSURANCE	.00	.00	.00	.00	.00
11-12-00-51360	MUNICIPAL CT RETIREMENT FUND	325.17	2,138.50	4,140.00	2,001.50	51.65
11-12-00-51520	MUNICIPAL CT SOCIAL SECURITY	648.63	4,184.67	5,817.00	1,632.33	71.94
11-12-00-52140	COLLECTION FEES	.00	158.40	200.00	41.60	79.20
11-12-00-52210	MUNICIPAL CT TELEPHONE	87.66	511.07	700.00	188.93	73.01
11-12-00-52900	CARE OF PRISONERS	30.00	195.00	2,000.00	1,805.00	9.75
11-12-00-53100	MUNICIPAL CT OFFICE SUPPLIES	68.75	426.21	500.00	73.79	85.24
11-12-00-53120	POSTAGE-MUNICIPAL COURT	172.30	1,021.69	500.00	521.69-	204.34
11-12-00-53300	MUNICIPAL CT TRAVEL-MILEAGE	.00	145.52	350.00	204.48	41.58
11-12-00-53310	MUN CT-MEALS & LODGING	.00	225.46	700.00	474.54	32.21
11-12-00-53320	MUN CT CONFERENCES & SCHOOL	.00	1,480.00	1,200.00	280.00-	123.33
11-12-00-53400	OPERATING SUPPLIES-CITATIONS	.00	.00	.00	.00	.00
11-12-00-53610	EQUIPMENT MAINT SERVICE COSTS	22.00	5,206.18	8,365.00	3,158.82	62.24
11-12-00-53810	MUNICIPAL COURT OPERATIONS	.00	24.00	550.00	526.00	4.36
11-12-00-53990	MUNICIPAL CT MISCELLANEOUS EXP	.00	.00	100.00	100.00	.00

Account Number	Account Title	2018-18 Period Actual	2018-18 Current year Actual	Current year Budget	Variance Current year	% of Budget
Total MUNICIPAL COURT:		10,098.81	71,701.39	101,291.00	29,589.61	70.79
Total MUNICIPAL COURT:		32,041.67	189,628.63	217,491.00	27,862.37	87.19
CITY ATTORNEY						
CITY ATTORNEY						
11-13-00-51130	CITY ATTORNEY SALARY	7,876.20	52,508.00	69,488.00	16,980.00	75.56
11-13-00-51150	LABOR NEGOTIATIONS	.00	.00	.00	.00	.00
11-13-00-51340	CITY ATTORNEY LIFE INSURANCE	34.58	345.80	418.00	72.20	82.73
11-13-00-51345	CITY ATTORNEY HEALTH INSURANC	.00	.00	.00	.00	.00
11-13-00-51360	CITY ATTORNEY RETIREMENT FUND	527.70	3,518.00	4,656.00	1,138.00	75.56
11-13-00-51520	CITY ATTORNEY SOCIAL SECURITY	602.52	4,016.80	5,316.00	1,299.20	75.56
11-13-00-52130	CITY ATTORNEY SERVICES	.00	.00	.00	.00	.00
11-13-00-53100	CITY ATTORNEY OFFICE SUPPLIES	.00	.00	.00	.00	.00
11-13-00-53300	CITY ATTORNEY TRAVEL-MILEAGE	.00	.00	.00	.00	.00
11-13-00-53310	CITY ATTORNEY MEALS & LODGING	.00	.00	450.00	450.00	.00
11-13-00-53320	CITY ATTORNEY SCHOOL/CONFER	.00	295.00	450.00	155.00	65.56
11-13-00-53990	CITY ATTORNEY MISC EXPENSES	.00	.00	300.00	300.00	.00
Total CITY ATTORNEY:		9,041.00	60,683.60	81,078.00	20,394.40	74.85
OUTSIDE ATTORNEYS EXPENDITURES						
11-13-10-52140	OUTSIDE ATTORNEYS FEES	.00	4,731.00	30,000.00	25,269.00	15.77
Total OUTSIDE ATTORNEYS EXPENDITURES:		.00	4,731.00	30,000.00	25,269.00	15.77
Total CITY ATTORNEY:		9,041.00	65,414.60	111,078.00	45,663.40	58.89
MAYOR						
MAYOR						
11-14-10-51140	MAYOR SALARY	2,373.93	5,275.40	6,858.00	1,582.60	76.92
11-14-10-51520	MAYOR SOCIAL SECURITY	181.61	403.48	525.00	121.52	76.85
11-14-10-53100	MAYOR OFFICE SUPPLIES	251.24	272.67	.00	272.67-	.00
11-14-10-53310	MAYOR MEALS,LODGING,ETC	.00	.00	200.00	200.00	.00
11-14-10-53990	MAYOR MISC EXPENSE	50.00	204.22	700.00	495.78	29.17
Total MAYOR:		2,856.78	6,155.77	8,283.00	2,127.23	74.32
CITY ADMINISTRATOR						
11-14-20-51100	CITY ADMINISTRATOR SALARY	.00	70,493.16	108,461.00	37,967.84	64.99
11-14-20-51330	REIMB OF INSURANCE DEDUCTIBLE	.00	.00	.00	.00	.00
11-14-20-51340	CITY ADMIN LIFE INSURANCE	.00	343.16	512.00	168.84	67.02
11-14-20-51345	CITY ADMIN HEALTH INSURANCE	.00	.00	.00	.00	.00
11-14-20-51360	CITY ADMIN RETIREMENT	.00	4,723.00	7,267.00	2,544.00	64.99
11-14-20-51520	CITY ADMIN SOCIAL SECURITY	.00	5,205.40	8,297.00	3,091.60	62.74
11-14-20-53100	CITY ADMIN OFFICE SUPPLIES	.00	223.41	200.00	23.41-	111.71
11-14-20-53240	DUES,BOOKS,PUBLICATIONS	.00	862.00	1,300.00	438.00	66.31
11-14-20-53300	CITY ADMIN TRAVEL-MILEAGE	.00	299.05	1,200.00	900.95	24.92
11-14-20-53310	CITY ADMIN MEALS/LODGING	246.00	752.57	1,300.00	547.43	57.89
11-14-20-53320	CITY ADMIN CONFR/SCHOOLS	.00	581.73	2,000.00	1,418.27	29.09
11-14-20-53990	CITY ADMIN MISC EXPENSE	6,976.69	11,097.74	200.00	10,897.74-	5,548.87
Total CITY ADMINISTRATOR:		7,222.69	94,581.22	130,737.00	36,155.78	72.34

Account Number	Account Title	2018-18 Period Actual	2018-18 Current year Actual	Current year Budget	Variance Current year	% of Budget
CITY CLERK						
11-14-30-43520	GRANTS-ELECTION	.00	.00	.00	.00	.00
Total CITY CLERK:		.00	.00	.00	.00	.00
CITY CLERK						
11-14-30-51100	CITY CLERK SALARY	7,500.00	50,000.00	60,198.00	10,198.00	83.06
11-14-30-51110	ASSISTANT CLERK WAGES	5,741.50	37,044.64	47,861.00	10,816.36	77.40
11-14-30-51200	CITY CLERK STAFF WAGES	1,770.16	6,236.16	17,274.00	11,037.84	36.10
11-14-30-51260	CITY CLERK SEASONAL WAGES	.00	.00	4,800.00	4,800.00	.00
11-14-30-51330	INS DEDUCTIBLE REIMBURSE	.00	.00	.00	.00	.00
11-14-30-51340	CITY CLERK LIFE INSURANCE	12.39	123.90	118.00	5.90-	105.00
11-14-30-51345	CITY CLERK HEALTH INSURANCE	.00	.00	.00	.00	.00
11-14-30-51360	CITY CLERK RETIREMENT FUND	887.18	5,836.32	8,397.00	2,560.68	69.50
11-14-30-51520	CITY CLERK SOCIAL SECURITY	1,239.05	7,380.68	9,955.00	2,574.32	74.14
11-14-30-51900	POLL WORKERS FEES	1,680.50	5,502.02	8,000.00	2,497.98	68.78
11-14-30-52180	MUNICIPAL CODIFICATION	435.04	3,056.86	5,000.00	1,943.14	61.14
11-14-30-53100	CITY CLERK OFFICE SUPPLIES	.00	954.38	1,100.00	145.62	86.76
11-14-30-53110	BALLOTS/OTHER ELECTION EXPENS	344.06	4,319.72	5,000.00	680.28	86.39
11-14-30-53120	POSTAGE-CITY CLERK	551.31	3,527.78	5,000.00	1,472.22	70.56
11-14-30-53140	RECALL ELECTION EXPENDITURES	.00	.00	.00	.00	.00
11-14-30-53300	CITY CLERK TRAVEL-MILEAGE	14.66	333.98	800.00	466.02	41.75
11-14-30-53310	CITY CLERK MEALS,LODGING	460.00	700.51	900.00	199.49	77.83
11-14-30-53320	CITY CLRK CONFERENCES & DUES	.00	852.00	1,100.00	248.00	77.45
11-14-30-53820	LICENSE/SUPPORT EXPENSE	299.00	1,895.58	2,000.00	104.42	94.78
11-14-30-53990	CITY CLERK MISCELLANEOUS EXP	.00	501.88	400.00	101.88-	125.47
11-14-30-57350	GRANT PURCHASES	.00	.00	.00	.00	.00
Total CITY CLERK:		20,934.85	128,266.41	177,903.00	49,636.59	72.10
Total MAYOR:		31,014.32	229,003.40	316,923.00	87,919.60	72.26
ACCOUNTING						
ACCOUNTING						
11-15-10-51100	ACCOUNTING SALARY	10,384.61	69,230.75	74,167.00	4,936.25	93.34
11-15-10-51200	ACCOUNTING WAGES	16,738.12	79,179.51	127,261.00	48,081.49	62.22
11-15-10-51260	ACCTG PART TIME WAGES	2,073.93	23,276.66	43,698.00	20,421.34	53.27
11-15-10-51330	ACCTG INS DEDUCTIBLE REIMB	.00	.00	.00	.00	.00
11-15-10-51340	ACCTG LIFE INSURANCE	59.71	435.10	657.00	221.90	66.23
11-15-10-51345	ACCTG HEALTH INSURANCE	.00	.00	.00	.00	.00
11-15-10-51360	ACCTG RETIREMENT EXP	1,817.21	10,617.68	15,057.00	4,439.32	70.52
11-15-10-51520	ACCTG SOCIAL SECURITY	2,221.58	13,096.66	18,833.00	5,736.34	69.54
11-15-10-52120	ACCTG CONSULTANT FEES	.00	7,235.00	2,000.00	5,235.00-	361.75
11-15-10-52130	INDEPENDENT AUDIT FEES	3,050.00	25,300.00	25,000.00	300.00-	101.20
11-15-10-53100	ACCTG OFFICE SUPPLIES	12.20	2,595.49	1,000.00	1,595.49-	259.55
11-15-10-53200	ACCTG PROFESSIONAL DUES	.00	80.00	250.00	170.00	32.00
11-15-10-53320	ACCTG CONFERENCES/TRAINING	.00	987.66	1,800.00	812.34	54.87
11-15-10-53990	ACCTG MISC EXPENSE	.00	1,178.96	15,200.00	14,021.04	7.76
11-15-10-54150	TUITION & BOOKS REIMB	.00	.00	.00	.00	.00
11-15-10-54500	COMPUTER IT SVC & EQUIPMENT	.00	21,531.33	30,000.00	8,468.67	71.77
Total ACCOUNTING:		36,357.36	254,744.80	354,923.00	100,178.20	71.77
TREASURER						
11-15-30-51120	TREASURER SALARY	.00	.00	.00	.00	.00
11-15-30-51260	TREASURER ASST-SEASONAL WAGE	.00	.00	.00	.00	.00

Account Number	Account Title	2018-18 Period Actual	2018-18 Current year Actual	Current year Budget	Variance Current year	% of Budget
11-15-30-51340	TREASURER LIFE INSURANCE	.00	.00	.00	.00	.00
11-15-30-51345	TREASURER HEALTH INSURANCE	.00	.00	.00	.00	.00
11-15-30-51360	TREASURER RETIREMENT FUND	.00	.00	.00	.00	.00
11-15-30-51520	TREASURER SOCIAL SECURITY	.00	.00	.00	.00	.00
11-15-30-52140	OUTSIDE COLLECTION FEES	.00	.00	.00	.00	.00
11-15-30-53100	TREASURER OFFICE SUPPLIES	.00	.00	.00	.00	.00
11-15-30-53120	TREASURER POSTAGE EXP	.00	.00	.00	.00	.00
11-15-30-53300	TREASURER TRAVEL-MILEAGE	.00	.00	.00	.00	.00
11-15-30-53310	TREASURER MEALS & LODGING	.00	.00	.00	.00	.00
11-15-30-53320	TREASURER CONFERENCES & DUES	.00	.00	.00	.00	.00
11-15-30-53990	TREASURER MISCELLANEOUS EXP	.00	.00	.00	.00	.00
Total TREASURER:		.00	.00	.00	.00	.00
ASSESSOR						
11-15-40-51200	ASSESSOR WAGES & SALARIES	.00	.00	.00	.00	.00
11-15-40-51260	ASSESSOR SEASONAL WAGES	.00	.00	.00	.00	.00
11-15-40-51330	INSURANCE DEDUCTIBLE REIMB	.00	.00	.00	.00	.00
11-15-40-51340	ASSESSOR LIFE INSURANCE	.00	.00	.00	.00	.00
11-15-40-51345	ASSESSOR HEALTH INSURANCE	.00	.00	.00	.00	.00
11-15-40-51360	ASSESSOR RETIREMENT FUND	.00	.00	.00	.00	.00
11-15-40-51520	ASSESSOR SOCIAL SECURITY	.00	.00	.00	.00	.00
11-15-40-52100	ASSESSOR CONTRACTED SERVICES	.00	40,000.00	40,000.00	.00	100.00
11-15-40-52110	ASSESSOR CONTRACT-COMMERCIA	.00	.00	.00	.00	.00
11-15-40-52130	MANUFACTURING ASSESSMENT	.00	.00	2,000.00	2,000.00	.00
11-15-40-52140	OUTSIDE ATTORNEYS FEES	.00	.00	.00	.00	.00
11-15-40-53100	ASSESSOR OFFICE SUPPLIES	.00	.00	.00	.00	.00
11-15-40-53120	ASSESSOR POSTAGE	.00	.00	.00	.00	.00
11-15-40-53200	ASSESSOR PROFESSIONAL DUES	.00	.00	.00	.00	.00
11-15-40-53300	ASSESSOR TRAVEL-MILEAGE	.00	.00	.00	.00	.00
11-15-40-53310	ASSESSOR MEALS & LODGING	.00	.00	.00	.00	.00
11-15-40-53320	ASSESSOR CONFERENCES & SCHO	.00	.00	.00	.00	.00
11-15-40-53980	BOARD OF REVIEW MISC EXPENSES	.00	.00	50.00	50.00	.00
11-15-40-53990	ASSESSOR MISCELLANEOUS EXPEN	.00	.00	.00	.00	.00
11-15-40-54100	ASSESSOR CERTIFICATIONS	.00	.00	.00	.00	.00
11-15-40-54500	ASSESSOR PROGRAMMING	.00	.00	.00	.00	.00
Total ASSESSOR:		.00	40,000.00	42,050.00	2,050.00	95.12
Total ACCOUNTING:		36,357.36	294,744.80	396,973.00	102,228.20	74.25
CITY HALL BUILDING						
CITY HALL BUILDING						
11-16-10-51200	CITY HALL MAINT WAGES	5,652.65	36,041.98	47,962.00	11,920.02	75.15
11-16-10-51250	CITY HALL MAINT OVERTIME	68.52	476.81	500.00	23.19	95.36
11-16-10-51340	CITY HALL MAINT LIFE INS	25.76	257.60	309.00	51.40	83.37
11-16-10-51345	CITY HALL MAINT HEALTH INSUR	.00	.00	.00	.00	.00
11-16-10-51360	CITY HALL MAINT RETIREMENT	383.32	2,447.18	3,247.00	799.82	75.37
11-16-10-51520	CITY HALL MAINT SOCIAL SEC	419.06	2,636.96	3,707.00	1,070.04	71.13
11-16-10-52210	CITY HALL TELEPHONE EXPENSE	1,333.32	7,669.80	10,000.00	2,330.20	76.70
11-16-10-52220	CITY HALL ELECTRICITY	5,034.43	31,333.45	45,000.00	13,666.55	69.63
11-16-10-52240	CITY HALL GAS HEAT	232.76	5,639.32	12,000.00	6,360.68	46.99
11-16-10-52260	CITY HALL WATER & SEWER EXP	.00	1,783.61	2,100.00	316.39	84.93
11-16-10-52400	CITY HALL BUILDING REPAIRS	5,144.52	15,631.04	22,000.00	6,368.96	71.05
11-16-10-53100	CITY HALL OFFICE SUPPLIES	10.87	2,126.76	3,300.00	1,173.24	64.45
11-16-10-53500	CITY HALL BLDG MAINT SUPPLIES	383.72	2,534.27	5,500.00	2,965.73	46.08

Account Number	Account Title	2018-18 Period Actual	2018-18 Current year Actual	Current year Budget	Variance Current year	% of Budget
11-16-10-53600	CITY HALL MAINT SERVICE COSTS	229.37	11,502.61	16,000.00	4,497.39	71.89
11-16-10-53990	CITY HALL MISC EXP	.00	.00	.00	.00	.00
11-16-10-55310	CH OFFICE EQUIPMENT CONTRACTS	373.31	2,119.27	5,000.00	2,880.73	42.39
11-16-10-55320	CH POSTAGE METER RENT & EXP	.00	1,832.60	5,000.00	3,167.40	36.65
Total CITY HALL BUILDING:		19,291.61	124,033.26	181,625.00	57,591.74	68.29
Total CITY HALL BUILDING:		19,291.61	124,033.26	181,625.00	57,591.74	68.29
SHERIDAN SPRINGS PROPERTY						
SHERIDAN SPRINGS PROPERTY						
11-17-10-52220	SHERIDAN SPRINGS ELECTRICITY	.00	.00	.00	.00	.00
11-17-10-52240	SHERIDAN SPRINGS HEAT EXP	.00	.00	.00	.00	.00
11-17-10-52260	SHERIDAN SPRINGS WATER & SEWE	.00	.00	.00	.00	.00
11-17-10-52400	SHERIDAN SPRINGS MAINTENANCE	.00	.00	.00	.00	.00
Total SHERIDAN SPRINGS PROPERTY:		.00	.00	.00	.00	.00
Total SHERIDAN SPRINGS PROPERTY:		.00	.00	.00	.00	.00
POLICE DEPARTMENT						
POLICE DEPARTMENT						
11-21-00-43520	LAW ENFORCEMENT TRAINING AIDS	.00	.00	5,120.00	5,120.00	.00
11-21-00-43530	FEDERAL GRANTS & REIMBURSEME	.00	.00	.00	.00	.00
11-21-00-43540	STATE GRANTS & REIMBURSEMENT	.00	2,314.57	5,000.00	2,685.43	46.29
11-21-00-46200	SEIZURES	.00	1,093.40	3,500.00	2,406.60	31.24
11-21-00-46210	MISCELLANEOUS REVENUE	219.50	1,461.15	2,100.00	638.85	69.58
11-21-00-46220	WAGE REIMBURSEMENTS	1,020.64	60,110.32	65,094.00	4,983.68	92.34
11-21-00-46230	MISC TAXABLE REVENUES	.00	355.45	50.00	305.45-	710.90
11-21-00-46240	FINGERPRINTING	150.00	578.75	.00	578.75-	.00
11-21-00-46250	VEHICLE LOCKOUT FEE	474.00	3,436.50	5,200.00	1,763.50	66.09
11-21-00-46260	BLOOD DRAW REIMBURSEMENT	262.50	945.00	1,100.00	155.00	85.91
11-21-00-47300	DONATIONS	.00	100.00	1,500.00	1,400.00	6.67
11-21-00-47350	COMMUNICATIONS REIMB-FIRE DEPT	.00	40,836.00	40,836.00	.00	100.00
11-21-00-47370	SOFTVEST DONATIONS/GRANTS	.00	1,573.72	5,296.00	3,722.28	29.72
11-21-00-48190	DISCOUNTS EARNED-PD	1.50	29.70	.00	29.70-	.00
11-21-00-48300	SALE OF POLICE EQUIPMENT	.00	.00	11,000.00	11,000.00	.00
11-21-00-48310	SALE OF 1033 PROPERTY	.00	.00	.00	.00	.00
Total POLICE DEPARTMENT:		2,128.14	112,834.56	145,796.00	32,961.44	77.39
POLICE DEPARTMENT						
11-21-00-51100	POLICE FT SALARIES	213,933.44	1,444,014.85	1,904,355.00	460,340.15	75.83
11-21-00-51200	POLICE PT WAGES	13,417.57	89,715.54	102,000.00	12,284.46	87.96
11-21-00-51250	POLICE OVERTIME WAGES	2,124.56	16,326.18	35,000.00	18,673.82	46.65
11-21-00-51270	PD COMPENSATION PER CONTRACT	8,025.64	49,735.72	145,198.00	95,462.28	34.25
11-21-00-51340	PD LIFE INSURANCE	821.28	2,963.98	2,828.00	135.98-	104.81
11-21-00-51345	PD HEALTH INSURANCE	.00	.00	.00	.00	.00
11-21-00-51360	PD RETIREMENT FUND	32,129.79	219,077.85	285,361.00	66,283.15	76.77
11-21-00-51380	PD UNIFORM ALLOWANCE	387.55	21,614.90	25,775.00	4,160.10	83.86
11-21-00-51390	PD RESERVES UNIFORM EXPENSE	56.00	3,878.32	5,900.00	2,021.68	65.73
11-21-00-51400	PD INTERPRETERS FEES	5.08	60.29	1,700.00	1,639.71	3.55
11-21-00-51410	PD OUTSIDE OFFICERS	.00	.00	.00	.00	.00
11-21-00-51520	PD SOCIAL SECURITY	17,849.54	120,817.02	167,271.00	46,453.98	72.23
11-21-00-51900	PFC COMMISSION EXPENSES	.00	227.92	600.00	372.08	37.99
11-21-00-52140	OUTSIDE LEGAL EXPENSES	.00	609.50	1,200.00	590.50	50.79

Account Number	Account Title	2018-18 Period Actual	2018-18 Current year Actual	Current year Budget	Variance Current year	% of Budget
11-21-00-52210	PD TELEPHONE EXPENSE	2,552.01	17,061.88	26,000.00	8,938.12	65.62
11-21-00-52220	POLICE IMPOUND BLDG ELECTRIC	23.09	223.22	400.00	176.78	55.81
11-21-00-52450	EQUIPMENT REPAIRS-INS CLAIMS	.00	1,233.15	2,000.00	766.85	61.66
11-21-00-52620	PD COMMUNICATION SYS MAINT FEE	250.00	1,994.97	9,000.00	7,005.03	22.17
11-21-00-52900	CARE OF PRISONERS	425.71	581.69	1,000.00	418.31	58.17
11-21-00-52910	CARE OF STRAY ANIMALS	.00	63.00	400.00	337.00	15.75
11-21-00-53050	DATA PROCESSING	.00	14,486.74	20,000.00	5,513.26	72.43
11-21-00-53100	PD OFFICE SUPPLIES	691.69	3,722.04	7,000.00	3,277.96	53.17
11-21-00-53120	PD POSTAGE	221.65	1,565.07	1,600.00	34.93	97.82
11-21-00-53160	CRIME PREVENTION PROGRAM	.00	1,495.40	6,000.00	4,504.60	24.92
11-21-00-53300	PD MILEAGE/TRAVEL	851.52	1,420.41	2,200.00	779.59	64.56
11-21-00-53310	PD MEALS & LODGING	479.60	5,010.34	5,500.00	489.66	91.10
11-21-00-53410	PD FUEL EXPENSE	.00	24,469.95	33,866.00	9,396.05	72.26
11-21-00-53420	PD SPECIAL EQUIPMENT	1,622.71	10,758.94	12,650.00	1,891.06	85.05
11-21-00-53610	PD EQUIP MAINT SERV COSTS	2,191.38	15,015.98	24,200.00	9,184.02	62.05
11-21-00-53800	PD SPECIAL INVESTIGATIONS	310.57	6,615.71	10,305.00	3,689.29	64.20
11-21-00-53990	PD MISCELLANEOUS EXP	67.76	1,823.67	4,000.00	2,176.33	45.59
11-21-00-54100	PD TRAINING EXPENSES	571.07	26,983.94	42,600.00	15,616.06	63.34
11-21-00-54110	PD APPLICATION PROCESS	14.00	7,333.96	11,000.00	3,666.04	66.67
11-21-00-54120	TRNG & TRAVEL-REIMBURSEABLE	.00	899.22-	.00	899.22	.00
11-21-00-54150	TUITION & BOOKS PER CONTRACT	.00	.00	11,400.00	11,400.00	.00
11-21-00-54500	PRO-PHOENIX SUPPORT CONTRACT	.00	27,549.66	27,392.00	157.66-	100.58
11-21-00-55310	COPY MACHINE & SHREDDING SVC	162.82	1,937.66	4,200.00	2,262.34	46.13
11-21-00-55330	TELETYPE EXPENSE	.00	9,228.00	11,053.00	1,825.00	83.49
11-21-00-57340	GRANT PURCHASES-FEDERAL	.00	.00	.00	.00	.00
11-21-00-57350	GRANT PURCHASES-STATE	.00	.00	.00	.00	.00
11-21-00-57360	DONATION PURCHASES	.00	.00	.00	.00	.00
11-21-00-57370	SOFTVEST EXPENDITURES	.00	2,415.00	9,026.00	6,611.00	26.76
11-21-00-57380	EXPENDITURES-SEIZURE $	.00	676.77	.00	676.77-	.00
11-21-00-57390	1033 EXPENDITURES	.00	.00	.00	.00	.00
11-21-00-58100	EQUIPMENT OUTLAY	.00	.00	.00	.00	.00
Total POLICE DEPARTMENT:		299,186.03	2,151,810.00	2,959,980.00	808,170.00	72.70
Total POLICE DEPARTMENT:		301,314.17	2,264,644.56	3,105,776.00	841,131.44	72.92
FIRE DEPARTMENT						
FIRE DEPARTMENT						
11-22-00-43400	EMS PROVIDER SUPPORT-ACT 102	5,237.04	5,237.04	5,300.00	62.96	98.81
11-22-00-43420	FIRE DUES FROM STATE	.00	45,622.05	43,000.00	2,622.05-	106.10
11-22-00-43540	STATE GRANTS & REIMBURSEMENT	.00	1,500.00	.00	1,500.00-	.00
11-22-00-44710	FIRE DEPT BURNING PERMIT	65.00	1,145.00	1,400.00	255.00	81.79
11-22-00-46100	MISCELLANEOUS REVENUE	11,726.00-	6,349.50	4,000.00	2,349.50-	158.74
11-22-00-46200	FIRE WAGE INCOME	.00	.00	.00	.00	.00
11-22-00-46210	VEHICLE/CHARGES	.00	.00	.00	.00	.00
11-22-00-46220	EMS WAGE INCOME	.00	.00	.00	.00	.00
11-22-00-46230	INSPECTION FEES	.00	26,277.50	81,500.00	55,222.50	32.24
11-22-00-46240	FIRE/EMS BILLING REVENUE	34,449.77	319,701.25	427,680.00	107,978.75	74.75
11-22-00-46250	PLAN REVIEW/SPRINKLER SYSTEMS	3,655.00	11,375.00	12,000.00	625.00	94.79
11-22-00-47300	TOWNSHIPS FIRE SERVICES	11,726.00	50,418.50	55,000.00	4,581.50	91.67
11-22-00-47400	EMS TRANSPORT/VEHICLE CHARGE	.00	.00	.00	.00	.00
11-22-00-47500	VIOLATION FEES	.00	.00	.00	.00	.00
11-22-00-48110	INTEREST	55.74	1,861.87	1,000.00	861.87-	186.19
11-22-00-48300	SALE OF FIRE DEPT EQUIPMENT	.00	.00	.00	.00	.00
11-22-00-48510	FIRE DEPT DONATIONS	450.00	5,936.00	2,000.00	3,936.00-	296.80
11-22-00-48550	DONATIONS-CPR CLASSES	.00	1,995.84	2,200.00	204.16	90.72

Account Number	Account Title	2018-18 Period Actual	2018-18 Current year Actual	Current year Budget	Variance Current year	% of Budget
11-22-00-49100	APPROP FROM DESIGNATED FB A/C	.00	.00	5,903.00	5,903.00	.00
Total FIRE DEPARTMENT:		43,912.55	477,419.55	640,983.00	163,563.45	74.48
FIRE DEPARTMENT						
11-22-00-51130	FIRE OFFICER SALARIES	12,800.88	32,137.43	41,835.00	9,697.57	76.82
11-22-00-51140	FIRE/EMS STIPEND PAY	4,417.67-	19,808.77	24,847.00	5,038.23	79.72
11-22-00-51150	FIRE SAFETY/PUBLIC ED WAGES	350.50	1,600.37	5,177.00	3,576.63	30.91
11-22-00-51160	FIRE/EMS OTHER PAY	611.57	3,629.45	5,100.00	1,470.55	71.17
11-22-00-51220	PAID ON PREMISE WAGES	55,836.14	358,913.86	471,366.00	112,452.14	76.14
11-22-00-51290	EMS LINN CALL PAY	.00	.00	.00	.00	.00
11-22-00-51300	EMS CITY CALL PAY	2,117.82	10,073.57	39,124.00	29,050.43	25.75
11-22-00-51310	EMS GENEVA TWP CALL PAY	171.11	74.25	.00	74.25-	.00
11-22-00-51330	FD LIFE INSURANCE EXP	71.03	665.54	1,000.00	334.46	66.55
11-22-00-51340	FD WORKMEN DISABILITY INS	.00	24,521.00	25,000.00	479.00	98.08
11-22-00-51345	FD HEALTH INSURANCE	.00	.00	.00	.00	.00
11-22-00-51360	FIRE/EMS RETIREMENT EXP	11,373.63	85,054.10	135,888.00	50,833.90	62.59
11-22-00-51380	FIRE DEPT UNIFORMS	685.80	10,066.38	7,500.00	2,566.38-	134.22
11-22-00-51400	FIRE CITY CALL PAY	3,184.03	31,676.37	52,979.00	21,302.63	59.79
11-22-00-51410	FIRE GENEVA TWP CALL PAY	848.13	5,697.93	7,000.00	1,302.07	81.40
11-22-00-51420	FIRE LINN TWP CALL PAY	.00	.00	.00	.00	.00
11-22-00-51430	FIRE WALWORTH CTY CALL PAY	.00	.00	.00	.00	.00
11-22-00-51440	FD TRAVEL/MEAL EXPENSES	.00	718.50	400.00	318.50-	179.63
11-22-00-51520	FD SOCIAL SECURITY EXP	5,984.15	39,470.94	58,965.00	19,494.06	66.94
11-22-00-51900	FIRE COMMISSION MISC EXP	.00	.00	.00	.00	.00
11-22-00-52140	OUTSIDE BILLING SERVICES	11,812.86	23,305.47	30,000.00	6,694.53	77.68
11-22-00-52150	FIRE INSPECTORS WAGES	2,620.47	24,174.61	35,333.00	11,158.39	68.42
11-22-00-52160	FIRE/EMS DATA ENTRY WAGES	834.45	7,024.91	17,317.00	10,292.09	40.57
11-22-00-52170	FIRE INVESTIGATION PAY	.00	.00	.00	.00	.00
11-22-00-52180	CONTRACTUAL SERVICES-PARATEC	.00	2,153.09	4,500.00	2,346.91	47.85
11-22-00-52210	FIRE TELEPHONE EXPENSE	868.91	6,124.40	7,850.00	1,725.60	78.02
11-22-00-52220	FIREHOUSE ELECTRICITY	1,023.00	10,121.04	13,950.00	3,828.96	72.55
11-22-00-52240	FIREHOUSE GAS HEAT	104.25	3,409.79	7,000.00	3,590.21	48.71
11-22-00-52260	FIREHOUSE WATER/SEWER BILLS	.00	1,321.68	1,300.00	21.68-	101.67
11-22-00-52400	EQUIPMENT REPAIRS-FIRE DEPT	2,546.93	23,946.76	15,000.00	8,946.76-	159.65
11-22-00-52410	FIREHOUSE REPAIRS	715.28	3,098.03	6,000.00	2,901.97	51.63
11-22-00-52620	FD-COMMUNICATION SYS MAINT FEE	.00	2,889.80	3,200.00	310.20	90.31
11-22-00-52650	PD COMMUNICATION SERVICES	.00	40,836.00	40,836.00	.00	100.00
11-22-00-53100	OFFICE SUPPLIES	.00	820.69	1,500.00	679.31	54.71
11-22-00-53120	POSTAGE EXPENSE	67.29	642.97	650.00	7.03	98.92
11-22-00-53200	MEMBERSHIP DUES & FEES	.00	95.00	2,250.00	2,155.00	4.22
11-22-00-53320	FIRE DEPT CONFERENCES/SCHOOL	.00	892.67	1,500.00	607.33	59.51
11-22-00-53400	OPERATING SUPPLIES	38.70	3,617.37	5,000.00	1,382.63	72.35
11-22-00-53410	FD FUEL EXPENSE	.00	9,395.78	9,000.00	395.78-	104.40
11-22-00-53500	BLDG MAINT SUPPLIES-FIREHOUSE	19.71	2,715.65	1,800.00	915.65-	150.87
11-22-00-53510	EQUIP MAINT SUPPLIES-FIRE DEPT	1,570.58	6,515.35	5,000.00	1,515.35-	130.31
11-22-00-53600	FIREHOUSE MAINT SERVICE COSTS	.00	89.00	3,400.00	3,311.00	2.62
11-22-00-53610	FD-EQUIP MAINT SERV COST	.00	.00	.00	.00	.00
11-22-00-53970	BAD DEBT EXPENSE/ADJUSTMENTS	.00	.00	.00	.00	.00
11-22-00-53980	FIRE FILM DEVELOPING	.00	.00	.00	.00	.00
11-22-00-53990	FIRE MISCELLANEOUS EXP	396.55	996.96	2,000.00	1,003.04	49.85
11-22-00-54100	FIRE TRAINING PAY	4,578.96	25,819.82	42,877.00	17,057.18	60.22
11-22-00-54120	TUITION REIMB PER CONTRACT	.00	302.28	4,000.00	3,697.72	7.56
11-22-00-54150	EXPENSE REIMB PER CONTRACT	.00	144.95	1,500.00	1,355.05	9.66
11-22-00-54500	FIRE IT SERVICES	799.00	2,944.00	7,300.00	4,356.00	40.33
11-22-00-54550	LEXIPOL	.00	5,218.00	5,218.00	.00	100.00

Account Number	Account Title	2018-18 Period Actual	2018-18 Current year Actual	Current year Budget	Variance Current year	% of Budget
11-22-00-54600	PRO PHOENIX SUPPORT CONTRACT	.00	6,122.43	6,084.00	38.43-	100.63
11-22-00-55100	EMS TRAINING PAY	1,192.30	9,595.66	23,724.00	14,128.34	40.45
11-22-00-55320	FD VOICE MAIL LEASE	.00	.00	.00	.00	.00
11-22-00-56100	CPR CLASS PAY	91.15	2,596.33	2,000.00	596.33-	129.82
11-22-00-57350	GRANT PURCHASES	.00	.00	.00	.00	.00
11-22-00-57360	DONATION PURCHASES	.00	.00	2,000.00	2,000.00	.00
11-22-00-57500	SPRINKLER SYSTEMS EXPENSES	235.00	5,112.50	4,000.00	1,112.50-	127.81
11-22-00-58000	FIRE EQUIPMENT/SUPPLIES	188.30	1,185.68	3,000.00	1,814.32	39.52
11-22-00-58100	EMS EQUIPMENT/SUPPLIES	1,053.32	12,612.23	13,000.00	387.77	97.02
11-22-00-58200	STATE MANDATED EQUIP TESTING	.00	16,127.47	19,500.00	3,372.53	82.70
11-22-00-58300	ACT 102 EXPENSES	.00	.00	5,300.00	5,300.00	.00
11-22-00-58400	PRE-EMPLOYMENT TESTING	.00	.00	.00	.00	.00
Total FIRE DEPARTMENT:		120,374.13	886,076.83	1,230,070.00	343,993.17	72.03
PROGRAM: 10						
11-22-10-52290	FIRE PROTECTION-HYDRANT RENTA	.00	.00	.00	.00	.00
Total PROGRAM: 10:		.00	.00	.00	.00	.00
Total FIRE DEPARTMENT:		164,286.68	1,363,496.38	1,871,053.00	507,556.62	72.87
BUILDING AND ZONING						
BUILDING AND ZONING						
11-24-00-44300	BUILDING PERMITS	14,772.45	189,351.23	130,000.00	59,351.23-	145.65
11-24-00-44310	ELECTRICAL PERMITS	5,587.10	69,730.60	28,000.00	41,730.60-	249.04
11-24-00-44320	PLUMBING PERMITS	3,705.00	31,132.00	22,000.00	9,132.00-	141.51
11-24-00-44330	OTHER PERMITS	4,648.90	36,205.06	35,000.00	1,205.06-	103.44
11-24-00-44340	UTILITY PERMITS	.00	.00	.00	.00	.00
11-24-00-44360	MISCELLANEOUS FEES	.00	.00	.00	.00	.00
11-24-00-44400	ZONING PERMITS & FEES	2,310.00	50,480.85	20,000.00	30,480.85-	252.40
11-24-00-46300	TRASH PICK-UP REVENUE	.00	.00	.00	.00	.00
Total BUILDING AND ZONING:		31,023.45	376,899.74	235,000.00	141,899.74-	160.38
BUILDING AND ZONING						
11-24-00-51100	BUILDING INSPECTOR SALARIES	8,798.97	58,659.82	76,350.00	17,690.18	76.83
11-24-00-51200	BUILDING INSPECTION WAGES	6,749.50	39,964.81	53,941.00	13,976.19	74.09
11-24-00-51330	INSURANCE DEDUCTIBLE REIMB	.00	.00	.00	.00	.00
11-24-00-51340	BLDG INSPECTOR LIFE INSURANCE	33.65	299.48	450.00	150.52	66.55
11-24-00-51345	BLDG INSPECTOR HEALTH INSUR	.00	.00	.00	.00	.00
11-24-00-51360	BLDG INSPECTOR RETIREMENT FUN	907.95	5,984.67	7,537.00	1,552.33	79.40
11-24-00-51520	BLDG INSPECTOR SOCIAL SECURITY	1,188.04	7,550.69	8,660.00	1,109.31	87.19
11-24-00-52170	CONTRACT-ELEVATOR INSPECTION	.00	150.00	100.00	50.00-	150.00
11-24-00-52180	CONTRACTS-WEIGHTS & MEASURES	.00	4,800.00	4,800.00	.00	100.00
11-24-00-52190	CONTRACT BUILDING INSPECTOR	1,280.00	8,426.00	6,000.00	2,426.00-	140.43
11-24-00-52620	TELEPHONE EXPENSE	71.82	340.28	800.00	459.72	42.54
11-24-00-53100	BLDG INSPECTOR OFFICE SUPPLIES	1,299.85	4,530.53	3,500.00	1,030.53-	129.44
11-24-00-53200	MEMBERSHIP DUES & FEES	.00	508.40	200.00	308.40-	254.20
11-24-00-53300	BLDG INSPECTOR TRAVEL-MILEAGE	500.01	4,119.73	3,000.00	1,119.73-	137.32
11-24-00-53310	BLDG INSP-MEALS & LODGING	.00	1,164.56	550.00	614.56-	211.74
11-24-00-53320	CONFERENCES & SCHOOL	500.00	2,003.79	500.00	1,503.79-	400.76
11-24-00-53990	BLDG INSPECTOR MISC EXPENSES	.00	66.88	5,000.00	4,933.12	1.34
11-24-00-58100	EQUIPMENT OUTLAY	.00	.00	.00	.00	.00

Account Number	Account Title	2018-18 Period Actual	2018-18 Current year Actual	Current year Budget	Variance Current year	% of Budget
Total BUILDING AND ZONING:		21,329.79	138,569.64	171,388.00	32,818.36	80.85
Total BUILDING AND ZONING:		52,353.24	515,469.38	406,388.00	109,081.38-	126.84
EMERGENCY MANAGEMENT						
EMERGENCY MANAGEMENT						
11-29-00-43530	FEDERAL GRANTS	.00	.00	.00	.00	.00
11-29-00-43540	STATE GRANTS	.00	4,500.00	5,000.00	500.00	90.00
Total EMERGENCY MANAGEMENT:		.00	4,500.00	5,000.00	500.00	90.00
EMERGENCY MANAGEMENT						
11-29-00-51200	EMER MGMT PART TIME WAGES	.00	.00	8,363.00	8,363.00	.00
11-29-00-51360	EMER MGMT RETIREMENT	.00	.00	1,474.00	1,474.00	.00
11-29-00-51520	EMER MGMT SOCIAL SEC	.00	.00	113.00	113.00	.00
11-29-00-52100	SIREN REPAIRS	.00	.00	4,000.00	4,000.00	.00
11-29-00-52210	EMER MGMT TELEPHONE EXP	40.01	360.09	800.00	439.91	45.01
11-29-00-52220	SIRENS ELECTRICTY	77.26	580.68	600.00	19.32	96.78
11-29-00-52500	FIRE SIREN REPAIRS	.00	.00	.00	.00	.00
11-29-00-53100	EMER MGMT OFFICE SUPPLIES	.00	270.45	500.00	229.55	54.09
11-29-00-53310	EMER MGMT MEALS,LODGING,ETC	.00	37.45	500.00	462.55	7.49
11-29-00-53400	EMER MGMT SUPPLIES	2,279.07	2,835.92	2,900.00	64.08	97.79
11-29-00-53600	ONE CALL NOW PROGRAM	.00	543.38	600.00	56.62	90.56
11-29-00-53610	EMER MGMT VEHICLE MAINT/SVC	.00	.00	2,000.00	2,000.00	.00
11-29-00-53990	EMER MGMT MISC EXP	.00	.00	500.00	500.00	.00
11-29-00-54100	EMER MGMT TRAINING EXP	.00	.00	500.00	500.00	.00
11-29-00-54130	PUBLIC EDUCATION	500.00	844.25	800.00	44.25-	105.53
11-29-00-54140	MEDICAL RESERVE CORPS	.00	.00	700.00	700.00	.00
11-29-00-55310	EMER MGMT COPYING COSTS	.00	.00	250.00	250.00	.00
11-29-00-57350	GRANT PURCHASES	.00	.00	.00	.00	.00
11-29-00-58000	FIRE SIRENS	.00	.00	.00	.00	.00
11-29-00-58100	EQUIPMENT OUTLAY	.00	.00	.00	.00	.00
Total EMERGENCY MANAGEMENT:		2,896.34	5,472.22	24,600.00	19,127.78	22.24
Total EMERGENCY MANAGEMENT:		2,896.34	9,972.22	29,600.00	19,627.78	33.69
DPW AND ENGINEERING						
DPW AND ENGINEERING						
11-30-00-52160	CITY ENGINEERING FEES	.00	.00	10,000.00	10,000.00	.00
11-30-00-52170	SURVEYING	.00	.00	800.00	800.00	.00
Total DPW AND ENGINEERING:		.00	.00	10,800.00	10,800.00	.00
Total DPW AND ENGINEERING:		.00	.00	10,800.00	10,800.00	.00
STREET DEPARTMENT						
STREET DEPARTMENT						
11-32-10-43550	MISC STREET DEPT GRANTS	.00	1,413.00	.00	1,413.00-	.00
11-32-10-44350	PUBLIC WORKS CONST PERMIT	450.00	1,475.00	.00	1,475.00-	.00
11-32-10-45220	RESTITUTION-STREET DEPT PROP	.00	.00	.00	.00	.00
11-32-10-46300	MISC STREET DEPT REVENUE	.00	231.53	1,500.00	1,268.47	15.44
11-32-10-46440	WEED CUTTING	1,755.50	1,650.00	1,000.00	650.00-	165.00
11-32-10-47300	STREET DEPT DONATIONS	.00	.00	.00	.00	.00

Account Number	Account Title	2018-18 Period Actual	2018-18 Current year Actual	Current year Budget	Variance Current year	% of Budget
Total STREET DEPARTMENT:		2,205.50	4,769.53	2,500.00	2,269.53-	190.78
STREET DEPARTMENT						
11-32-10-51000	DIRECTOR OF PUBLIC WORKS	65,083.15	65,083.15	84,615.00	19,531.85	76.92
11-32-10-51100	ASST PW DIRECTOR SALARY	55,317.25-	.00	76,365.00	76,365.00	.00
11-32-10-51110	REDISTRIBUTABLE ST DEPT LABOR	.00	.00	.00	.00	.00
11-32-10-51200	ST DEPT WAGES	32,071.95	241,850.08	218,870.00	22,980.08-	110.50
11-32-10-51250	ST DEPT OVERTIME WAGES	3,228.28	6,891.12	10,000.00	3,108.88	68.91
11-32-10-51260	ST DEPT SEASONAL LABOR	549.25	8,040.04	26,000.00	17,959.96	30.92
11-32-10-51330	INS DEDUCTIBLE REIMBURSEMENT	.00	.00	.00	.00	.00
11-32-10-51340	ST DEPT LIFE INSURANCE	157.86	1,437.90	2,000.00	562.10	71.90
11-32-10-51345	ST DEPT HEALTH INSURANCE	.00	.00	.00	.00	.00
11-32-10-51360	ST DEPT RETIREMENT FUND	3,032.09	21,735.25	26,441.00	4,705.75	82.20
11-32-10-51380	ST DEPT UNIFORM ALLOW	.00	9,000.00	7,800.00	1,200.00-	115.38
11-32-10-51520	ST DEPT SOCIAL SECURITY	3,324.43	24,367.82	31,771.00	7,403.18	76.70
11-32-10-52050	DRUG AND MEDICAL TESTING	70.00	290.00	1,300.00	1,010.00	22.31
11-32-10-52210	ST DEPT TELEPHONE EXPENSE	401.78	2,656.86	3,500.00	843.14	75.91
11-32-10-52220	ST DEPT BLDG ELECTRICITY	957.00	8,017.47	11,000.00	2,982.53	72.89
11-32-10-52240	ST DEPT BLDG GAS HEAT	58.87	5,339.86	12,000.00	6,660.14	44.50
11-32-10-52260	ST DEPT BLDG-WATER & SEWER	.00	730.77	1,000.00	269.23	73.08
11-32-10-52400	ST DEPT BUILDING REPAIRS	.00	139.96	2,000.00	1,860.04	7.00
11-32-10-52500	ST DEPT EQUIPMENT REPAIRS	1,492.73	15,998.29	36,000.00	20,001.71	44.44
11-32-10-52620	ST DEPT COMM SYSTEM MAINT FEE	.00	713.74	4,000.00	3,286.26	17.84
11-32-10-52700	SIDEWALK REPAIRS	.00	.00	2,000.00	2,000.00	.00
11-32-10-53300	MILEAGE/TRAVEL	.00	174.31	200.00	25.69	87.16
11-32-10-53310	MEALS/LODGING	.00	335.00	100.00	235.00-	335.00
11-32-10-53320	CONFERENCES/DUES	.00	1,095.00	300.00	795.00-	365.00
11-32-10-53400	OPERATING SUPPLIES-STREET DEPT	11,552.26-	3,082.15	8,000.00	4,917.85	38.53
11-32-10-53410	VEHICLE-FUEL & OIL	13,381.31	39,740.79	60,000.00	20,259.21	66.23
11-32-10-53420	MOSQUITO CONTROL	.00	1,834.77	3,500.00	1,665.23	52.42
11-32-10-53440	WEED CUTTING	1,800.00	1,950.00	5,000.00	3,050.00	39.00
11-32-10-53450	SAFETY GRANT EXPENDITURES	.00	2,077.86	.00	2,077.86-	.00
11-32-10-53500	BLDG MAINT SUPPLIES-STR DEPT	56.33	3,174.37	2,350.00	824.37-	135.08
11-32-10-53510	VEHICLE/EQUIPMENT MAINTENANCE	157.42	10,757.74	12,000.00	1,242.26	89.65
11-32-10-53600	ST DEPT BLDG MAINT SERV COSTS	41.93	1,682.45	3,000.00	1,317.55	56.08
11-32-10-53700	ROAD MAINTENANCE SUPPLIES	225.00	225.00	8,000.00	7,775.00	2.81
11-32-10-53750	STREET CRACK FILLING	.00	.00	.00	.00	.00
11-32-10-53900	FIRST AID AND SAFETY SUPPLIES	.00	735.04	2,500.00	1,764.96	29.40
11-32-10-53990	ST DEPT MISCELLANEOUS EXP	128.01	268.51	3,000.00	2,731.49	8.95
11-32-10-57360	DONATION PURCHASES	.00	.00	.00	.00	.00
Total STREET DEPARTMENT:		59,347.88	479,425.30	664,612.00	185,186.70	72.14
SNOW AND ICE						
11-32-12-46310	SNOW & ICE CONTROL	.00	1,500.00	1,000.00	500.00-	150.00
Total SNOW AND ICE:		.00	1,500.00	1,000.00	500.00-	150.00
SNOW AND ICE						
11-32-12-51200	SNOW & ICE CONTROL WAGES	.00	23,592.28	31,558.00	7,965.72	74.76
11-32-12-51250	SNOW & ICE CONTROL OVERTIME	.00	6,971.45	30,489.00	23,517.55	22.87
11-32-12-51340	SNOW & ICE LIFE INSURANCE	.00	.00	.00	.00	.00
11-32-12-51345	SNOW & ICE HEALTH INSURANCE	.00	.00	.00	.00	.00
11-32-12-51360	SNOW & ICE RETIREMENT FUND	.00	2,005.73	4,219.00	2,213.27	47.54
11-32-12-51520	SNOW & ICE SOCIAL SECURITY	.00	2,233.59	4,746.00	2,512.41	47.06

Account Number	Account Title	2018-18 Period Actual	2018-18 Current year Actual	Current year Budget	Variance Current year	% of Budget
11-32-12-52200	CONTRACT HAULING SERVICES	.00	6,596.50	8,000.00	1,403.50	82.46
11-32-12-52500	SNOW & ICE CONTROL-REPAIRS	.00	1,921.08	4,000.00	2,078.92	48.03
11-32-12-53100	SNOW & ICE OFFICE SUPPLIES	.00	.00	.00	.00	.00
11-32-12-53400	OPERATING SUPPLIES-SNOW & ICE	12,720.24	48,022.89	42,000.00	6,022.89-	114.34
11-32-12-53440	SNOW REMOVAL EXPENSES	.00	1,645.95	1,000.00	645.95-	164.60
11-32-12-53510	EQUIP MAINT SUPPL-SNOW & ICE	.00	3,134.19	2,500.00	634.19-	125.37
Total SNOW AND ICE:		12,720.24	96,123.66	128,512.00	32,388.34	74.80
TREE AND BRUSH						
11-32-13-46440	BRUSH PICKUP CHARGES	.00	.00	500.00	500.00	.00
11-32-13-46810	SALE OF TREES	.00	.00	.00	.00	.00
11-32-13-48510	DONATIONS TO TREE PROGRAM	.00	.00	.00	.00	.00
Total TREE AND BRUSH:		.00	.00	500.00	500.00	.00
TREE AND BRUSH						
11-32-13-51200	TREE & BRUSH WAGES	3,970.10	36,427.40	57,863.00	21,435.60	62.95
11-32-13-51250	TREE & BRUSH OVERTIME	118.15	707.38	1,068.00	360.62	66.23
11-32-13-51340	TREE & BRUSH LIFE INSURANCE	.00	.00	.00	.00	.00
11-32-13-51345	TREE & BRUSH HEALTH INSURANCE	.00	.00	.00	.00	.00
11-32-13-51360	TREE & BRUSH RETIREMENT FUND	273.91	2,485.00	4,006.00	1,521.00	62.03
11-32-13-51520	TREE & BRUSH SOC SEC	291.51	2,722.62	4,507.00	1,784.38	60.41
11-32-13-52200	FORESTRY SERVICES	.00	3,208.90	2,250.00	958.90-	142.62
11-32-13-53440	BRUSH PICKUP EXPENSES	105.50	105.50	.00	105.50-	.00
11-32-13-53460	PURCHASE OF TREES	.00	573.60	10,000.00	9,426.40	5.74
11-32-13-54100	TRAINING & SEMINARS	.00	698.00	1,200.00	502.00	58.17
11-32-13-54200	TREE & BRUSH-REPAIR	.00	1,135.60	2,000.00	864.40	56.78
11-32-13-54300	TREE & BRUSH OPERATING SUPPLY	373.95	5,671.53	8,000.00	2,328.47	70.89
11-32-13-56810	MEMORIAL TREE PURCHASES	.00	.00	.00	.00	.00
Total TREE AND BRUSH:		5,133.12	53,735.53	90,894.00	37,158.47	59.12
COMPOST OPERATIONS						
11-32-14-51200	COMPOSTING ST DEPT WAGES	1,351.03	14,273.07	47,133.00	32,859.93	30.28
11-32-14-51250	COMPOSTING OVERTIME	.00	.00	559.00	559.00	.00
11-32-14-51340	COMPOSTING LIFE INS	.00	.00	.00	.00	.00
11-32-14-51345	COMPOSTING HEALTH INSURANCE	.00	.00	.00	.00	.00
11-32-14-51360	COMPOSTING RETIREMENT FUND	90.53	956.20	3,243.00	2,286.80	29.49
11-32-14-51520	COMPOSTING SOCIAL SECURITY	96.14	1,036.85	3,648.00	2,611.15	28.42
11-32-14-52200	COMPOSTING SERVICES	.00	.00	7,000.00	7,000.00	.00
11-32-14-54300	COMPOSTING OPERATING SUPPLIES	63.98	475.87	2,300.00	1,824.13	20.69
Total COMPOST OPERATIONS:		1,601.68	16,741.99	63,883.00	47,141.01	26.21
STORM SEWER						
11-32-15-51200	STORM SEWER WAGES	916.10	1,126.10	2,130.00	1,003.90	52.87
11-32-15-51250	STORM SEWER OVERTIME	.00	.00	33.00	33.00	.00
11-32-15-51340	STORM SEWER LIFE INS	.00	.00	.00	.00	.00
11-32-15-51345	STORM SEWER HEALTH INSURANCE	.00	.00	.00	.00	.00
11-32-15-51360	STORM SEWER RETIREMENT	61.39	75.46	146.00	70.54	51.68
11-32-15-51520	STORM SEWER SOC SEC	66.04	81.09	163.00	81.91	49.75
11-32-15-54500	STORM SEWER MAINTENANCE	.00	3,224.00	11,200.00	7,976.00	28.79
11-32-15-54600	STORM SEWER DIGGERS HOTLINE	.00	51.00	2,000.00	1,949.00	2.55
11-32-15-54700	REPAVING MAINTENANCE COSTS	.00	.00	.00	.00	.00

Account Number	Account Title	2018-18 Period Actual	2018-18 Current year Actual	Current year Budget	Variance Current year	% of Budget
Total STORM SEWER:		1,043.53	4,557.65	15,672.00	11,114.35	29.08
Total STREET DEPARTMENT:		82,051.95	656,853.66	967,573.00	310,719.34	67.89
TRAFFIC CONTROL						
TRAFFIC CONTROL						
11-34-10-46390	CAR TOWING REIMBURSEMENTS	310.00	2,728.00	1,900.00	828.00-	143.58
Total TRAFFIC CONTROL:		310.00	2,728.00	1,900.00	828.00-	143.58
TRAFFIC CONTROL						
11-34-10-51200	TRAFFIC CONTROL WAGES	360.00	2,088.75	3,054.00	965.25	68.39
11-34-10-51250	TRAFFIC CONTROL OVERTIME	90.00	158.56	407.00	248.44	38.96
11-34-10-51340	TRAFFIC CONTROL LIFE INS	.00	.00	.00	.00	.00
11-34-10-51345	TRAFFIC CONTROL HEALTH INSUR	.00	.00	.00	.00	.00
11-34-10-51360	TRAFFIC CONTROL RETIREMENT	30.14	150.60	236.00	85.40	63.81
11-34-10-51520	TRAFFIC CONTROL FICA EXP	32.63	164.94	265.00	100.06	62.24
11-34-10-52220	ELECTRICITY-FLASHERS	344.57	3,008.12	3,500.00	491.88	85.95
11-34-10-52230	STREET LIGHTS ELECTRICITY	8,118.18	75,283.07	103,000.00	27,716.93	73.09
11-34-10-52600	REPAIRS-TRAFFIC SIGNALS,ETC	209.65	782.83	5,500.00	4,717.17	14.23
11-34-10-52610	STREET LIGHTS REPAIRS	502.33	5,289.43	4,000.00	1,289.43-	132.24
11-34-10-52900	CAR TOWING	220.00	2,126.25	3,300.00	1,173.75	64.43
11-34-10-53700	MARKING PAINT	.00	10,657.22	15,000.00	4,342.78	71.05
11-34-10-53740	STREET IDENTIFICATION SIGNS	.00	.00	2,000.00	2,000.00	.00
11-34-10-53750	TRAFFIC CONTROL STREET SIGNS	23.15	1,721.08	5,000.00	3,278.92	34.42
11-34-10-53940	STREET DECORATIONS	.00	1,404.45	2,000.00	595.55	70.22
Total TRAFFIC CONTROL:		9,930.65	102,835.30	147,262.00	44,426.70	69.83
Total TRAFFIC CONTROL:		10,240.65	105,563.30	149,162.00	43,598.70	70.77
SANITATION AND RECYCLING						
SANITATION AND RECYCLING						
11-36-00-52940	SOLID WASTE-RESIDENTIAL	27,697.29	248,546.04	329,900.00	81,353.96	75.34
11-36-00-52950	SOLID WASTE-CONDOMINIUMS	.00	.00	.00	.00	.00
11-36-00-52960	SOLID WASTE-STREET DEPT	593.06	9,501.70	9,800.00	298.30	96.96
11-36-00-52970	SOLID WASTE-RECYCLING	11,343.60	101,885.30	134,000.00	32,114.70	76.03
Total SANITATION AND RECYCLING:		39,633.95	359,933.04	473,700.00	113,766.96	75.98
Total SANITATION AND RECYCLING:		39,633.95	359,933.04	473,700.00	113,766.96	75.98
MUSEUM						
MUSEUM						
11-51-10-52220	MUSEUM-ELECTRICITY	1,447.47	7,845.38	13,000.00	5,154.62	60.35
11-51-10-52240	MUSEUM-GAS HEAT	43.32	2,583.62	4,000.00	1,416.38	64.59
11-51-10-52260	MUSEUM-WATER & SEWER EXP	.00	1,293.95	1,350.00	56.05	95.85
11-51-10-52400	MUSEUM-MAINTENANCE & REPAIRS	46.93	5,581.64	4,000.00	1,581.64-	139.54
11-51-10-57350	MUSEUM-OPERATIONS SUBSIDY	.00	6,500.00	13,000.00	6,500.00	50.00
Total MUSEUM:		1,537.72	23,804.59	35,350.00	11,545.41	67.34
Total MUSEUM:		1,537.72	23,804.59	35,350.00	11,545.41	67.34

Account Number	Account Title	2018-18 Period Actual	2018-18 Current year Actual	Current year Budget	Variance Current year	% of Budget
PARKS						
PARKS						
11-52-00-46740	PARK APPLICATION FEE	.00	1,690.00	650.00	1,040.00-	260.00
11-52-00-46750	PARK USE FEES	.00	8,512.00	7,000.00	1,512.00-	121.60
11-52-00-48500	PARK DONATIONS	.00	.00	.00	.00	.00
11-52-00-48910	PARK FUND COLLECTIONS	.00	20.00	.00	20.00-	.00
Total PARKS:		.00	10,222.00	7,650.00	2,572.00-	133.62
PARKS						
11-52-00-51200	PARKS WAGES	14,714.10	68,431.78	72,278.00	3,846.22	94.68
11-52-00-51250	PARKS OVERTIME WAGES	685.93	2,248.11	6,108.00	3,859.89	36.81
11-52-00-51340	PARKS LIFE INSURANCE	.00	.00	.00	.00	.00
11-52-00-51345	PARKS HEALTH INSURANCE	.00	.00	.00	.00	.00
11-52-00-51360	PARKS RETIREMENT FUND	1,031.82	4,735.73	5,330.00	594.27	88.85
11-52-00-51520	PARKS SOCIAL SECURITY	1,138.50	5,213.23	5,997.00	783.77	86.93
11-52-00-52220	PARKS ELECTRICITY	788.95	6,870.62	7,500.00	629.38	91.61
11-52-00-52260	PARKS WATER & SEWER EXP	.00	5,184.29	10,000.00	4,815.71	51.84
11-52-00-52270	FOUNTAINS/STATUES-WATER/SEWE	.00	1,979.18	3,000.00	1,020.82	65.97
11-52-00-52410	BLDG MAINT&REPAIR-PARKS	567.72	1,118.84	2,700.00	1,581.16	41.44
11-52-00-52500	EQUIPMENT REPAIR SERVICES	391.30	5,584.07	6,100.00	515.93	91.54
11-52-00-53400	PARKS OPERATING SUPPLIES	.00	799.74	2,000.00	1,200.26	39.99
11-52-00-53500	BLDG MAINT SUPPLIES-PARKS	805.11	20,454.86	14,000.00	6,454.86-	146.11
11-52-00-53520	GROUNDS MAINT SUPPLIES	12.99	3,503.49	9,000.00	5,496.51	38.93
11-52-00-53620	GROUNDS FERTILIZER/WEED CONTR	.00	3,745.21	7,000.00	3,254.79	53.50
11-52-00-53990	PARKS MISCELLANEOUS EXPENSES	.00	1,782.14	3,000.00	1,217.86	59.40
11-52-00-57360	PARK DONATION PURCHASES	12,610.00	12,610.00	.00	12,610.00-	.00
11-52-00-58400	4 SEASON NATURE PRESERVE	.00	199.90	500.00	300.10	39.98
11-52-00-59220	DUNN FIELD ELECTRIC	100.98	1,499.07	2,500.00	1,000.93	59.96
11-52-00-59500	BLDG MAINT SUPPLIES-RECREATION	.00	.00	.00	.00	.00
11-52-00-59510	EQUIP MAINT SUPPL-RECREATION	.00	668.47	500.00	168.47-	133.69
Total PARKS:		32,847.40	146,628.73	157,513.00	10,884.27	93.09
VETERANS PARK						
11-52-01-51200	VETS PARKS WAGES	5,395.30	27,929.61	29,522.00	1,592.39	94.61
11-52-01-51250	VETS PARKS OVERTIME	458.85	458.85	.00	458.85-	.00
11-52-01-51340	VETS PARK LIFE INSURANCE	.00	.00	.00	.00	.00
11-52-01-51345	VETS PARK HEALTH INSURANCE	.00	.00	.00	.00	.00
11-52-01-51360	VETS PARKS RETIREMENT FUND	379.59	1,888.85	2,007.00	118.15	94.11
11-52-01-51520	VETS PARKS SOCIAL SECURITY	411.12	2,063.33	2,257.00	193.67	91.42
11-52-01-52220	VETS PARKS ELECTRICITY	857.10	6,759.26	8,500.00	1,740.74	79.52
11-52-01-52240	VETS PARK GAS HEAT	20.13	531.66	1,000.00	468.34	53.17
11-52-01-52260	VETS PARK WATER & SEWER	.00	1,550.36	1,300.00	250.36-	119.26
11-52-01-53400	VETS PARK OPERATING SUPPLIES	20.94	266.48	1,500.00	1,233.52	17.77
11-52-01-53500	BLDG MAINT & REPAIR	163.49	1,087.66	1,500.00	412.34	72.51
11-52-01-59520	GROUNDS MAINTENANCE SUPPLIES	.00	1,740.55	2,500.00	759.45	69.62
Total VETERANS PARK:		7,706.52	44,276.61	50,086.00	5,809.39	88.40
Total PARKS:		40,553.92	201,127.34	215,249.00	14,121.66	93.44
PLAN COMMISSION						
PLAN COMMISSION						
11-69-30-51100	PLAN COMMISSION SALARIES	.00	.00	.00	.00	.00
11-69-30-51900	PLAN COMMISSION MEETINGS	.00	.00	.00	.00	.00

Account Number	Account Title	2018-18 Period Actual	2018-18 Current year Actual	Current year Budget	Variance Current year	% of Budget
11-69-30-52120	OUTSIDE PROFESSIONAL PLANNING	813.75	19,374.42	9,000.00	10,374.42-	215.27
11-69-30-52150	SMART GROWTH SERVICES	.00	.00	.00	.00	.00
11-69-30-52160	COMPREHENSIVE PLAN	.00	.00	.00	.00	.00
11-69-30-52180	ZONING CODES	.00	.00	.00	.00	.00
11-69-30-53100	PLAN COMMISSION OFFICE SUPPL	.00	.00	.00	.00	.00
11-69-30-53140	OFFICAL PUBLICATION & NOTICES	.00	.00	.00	.00	.00
11-69-30-53320	PLAN COMMISSION CONF & SCHOOL	.00	.00	.00	.00	.00
11-69-30-53990	PLAN COMMISSION MISC EXP	.00	.00	.00	.00	.00
Total PLAN COMMISSION:		813.75	19,374.42	9,000.00	10,374.42-	215.27
Total PLAN COMMISSION:		813.75	19,374.42	9,000.00	10,374.42-	215.27
CONSERVATION AND DEVELOPMENT						
CONSERVATION AND DEVELOPMENT						
11-70-00-47210	HISTORIC PRESERVATION DONATIO	.00	1,022.00	.00	1,022.00-	.00
11-70-00-47230	HISTORIC PLAQUE REIMBURSEMENT	.00	.00	.00	.00	.00
11-70-00-47300	AVIAN DONATIONS	484.50	1,152.72	.00	1,152.72-	.00
Total CONSERVATION AND DEVELOPMENT:		484.50	2,174.72	.00	2,174.72-	.00
CONSERVATION AND DEVELOPMENT						
11-70-00-57100	HOTEL/MOTEL ASSN-CHAM OF COM	.00	.00	.00	.00	.00
11-70-00-57200	HISTORIC PRESERVATION	.00	230.00	3,500.00	3,270.00	6.57
11-70-00-57210	EXP FROM HIST PRES DONATIONS	.00	.00	.00	.00	.00
11-70-00-57230	HISTORIC PLAQUE PURCHASES	.00	.00	.00	.00	.00
11-70-00-57500	CEMETERY-OPERATING CONTRIB	.00	.00	.00	.00	.00
11-70-00-57600	YMCA-YOUTH ATHLETIC PROGRAM	9,000.00	45,000.00	54,000.00	9,000.00	83.33
11-70-00-57700	LAKE GENEVA CVB ASSISTANCE	.00	.00	.00	.00	.00
11-70-00-57800	AVIAN COMMITTEE EXPENSES	.00	798.87	50.00	748.87-	1,597.74
Total CONSERVATION AND DEVELOPMENT:		9,000.00	46,028.87	57,550.00	11,521.13	79.98
CEMETERY						
11-70-10-51200	CEMETERY WAGES	.00	.00	.00	.00	.00
11-70-10-51250	CEMETERY OVERTIME	.00	.00	.00	.00	.00
11-70-10-51340	CEMETERY HEALTH/DEN/FLEX INS	.00	.00	.00	.00	.00
11-70-10-51345	CEMETERY HEALTH INSURANCE	.00	.00	.00	.00	.00
11-70-10-51360	CEMETERY RETIREMENT EXP	.00	.00	.00	.00	.00
11-70-10-51370	CEMETERY DISABILITY INS	.00	.00	.00	.00	.00
11-70-10-51520	CEMETERY FICA EXP	.00	.00	.00	.00	.00
11-70-10-52210	CEMETERY PHONE EXP	.00	.00	.00	.00	.00
11-70-10-57500	CEMETERY OPERATING CONTRIBUT	.00	.00	.00	.00	.00
Total CEMETERY:		.00	.00	.00	.00	.00
Total CONSERVATION AND DEVELOPMENT:		9,484.50	48,203.59	57,550.00	9,346.41	83.76
GENERAL FUND Revenue Total:		232,516.69	7,727,539.11	9,431,358.00	1,703,818.89	81.93
GENERAL FUND Expenditure Total:		867,593.53	6,427,519.79	9,431,358.00	3,003,838.21	68.15
Net Total GENERAL FUND:		635,076.84-	1,300,019.32	.00	1,300,019.32-	.00

Account Number	Account Title	2018-18 Period Actual	2018-18 Current year Actual	Current year Budget	Variance Current year	% of Budget
DEBT SERVICE						
DEBT SERVICE						
DEBT SERVICE						
20-81-00-41110	PROPERTY TAX LEVY	.00	1,070,706.00	1,070,706.00	.00	100.00
20-81-00-48110	INTEREST INCOME	.00	.00	.00	.00	.00
20-81-00-49000	BOND PROCEEDS	.00	.00	.00	.00	.00
20-81-00-49100	APPLIED PRIOR YR APPROPRIATION	.00	.00	.00	.00	.00
20-81-00-49400	TRANSFER IN FROM GENERAL FUND	.00	.00	.00	.00	.00
Total DEBT SERVICE:		.00	1,070,706.00	1,070,706.00	.00	100.00
DEBT SERVICE						
20-81-00-52160	PROFESSIONAL SERVICES	.00	.00	.00	.00	.00
20-81-00-56130	2003 REF GO BONDS-PRINCIPAL	.00	.00	.00	.00	.00
20-81-00-56150	2006 REF GO BONDS-PRINCIPAL	.00	.00	.00	.00	.00
20-81-00-56230	ALLIANT ENERGY LOAN-PRINCIPAL	.00	.00	.00	.00	.00
20-81-00-56240	2011 PROM NOTE-PRINCIPAL	.00	540,000.00	540,000.00	.00	100.00
20-81-00-56250	2011 SHARED SAVINGS-PRINCIPAL	.00	.00	.00	.00	.00
20-81-00-56260	2014 BOND-PRINCIPAL	.00	355,000.00	355,000.00	.00	100.00
20-81-00-56270	2017 GO LOAN-PRINCIPAL	.00	.00	55,143.00	55,143.00	.00
20-81-00-56530	2003 REF GO BONDS-INTEREST	.00	.00	.00	.00	.00
20-81-00-56550	2006 REF GO BONDS-INTEREST	.00	.00	.00	.00	.00
20-81-00-56560	2011 PROM NOTE-INTEREST	21,967.50	50,080.00	49,605.00	475.00-	100.96
20-81-00-56570	2014 BOND-INTEREST	22,150.00	49,625.00	49,625.00	.00	100.00
20-81-00-56580	2017 GO LOAN-INTEREST	4,674.00	13,535.12	21,333.00	7,797.88	63.45
20-81-00-56630	ALLIANT ENERGY LOAN-INTEREST	.00	.00	.00	.00	.00
20-81-00-56640	2011 SHARED SAVINGS-INTEREST	.00	.00	.00	.00	.00
20-81-00-59500	TRANSFER TO GENERAL FUND	.00	.00	.00	.00	.00
Total DEBT SERVICE:		48,791.50	1,008,240.12	1,070,706.00	62,465.88	94.17
Total DEBT SERVICE:		48,791.50	2,078,946.12	2,141,412.00	62,465.88	97.08
DEBT SERVICE Revenue Total:		.00	1,070,706.00	1,070,706.00	.00	100.00
DEBT SERVICE Expenditure Total:		48,791.50	1,008,240.12	1,070,706.00	62,465.88	94.17
Net Total DEBT SERVICE:		48,791.50-	62,465.88	.00	62,465.88-	.00

Account Number	Account Title	2018-18 Period Actual	2018-18 Current year Actual	Current year Budget	Variance Current year	% of Budget
LAKEFRONT OPERATIONS						
LAKEFRONT OPERATIONS						
LAKEFRONT OPERATIONS						
40-00-00-49100	APPL. PRIOR YR APPROPRIATIONS	.00	.00	.00	.00	.00
Total LAKEFRONT OPERATIONS:		.00	.00	.00	.00	.00
Total LAKEFRONT OPERATIONS:		.00	.00	.00	.00	.00
BUOYS AND BOAT STALLS						
BUOYS AND BOAT STALLS						
40-52-10-46750	BUOY/BOAT STALL WAITING LIST	100.00	1,215.00	1,100.00	115.00-	110.45
40-52-10-46760	BUOY/STALL LATE FEES	.00	772.27	300.00	472.27-	257.42
40-52-10-46770	BUOY & BOAT STALL RENTAL	.00	187,026.04	183,720.00	3,306.04-	101.80
40-52-10-47250	DONATIONS - LAKEFRONT	.00	25.00	.00	25.00-	.00
Total BUOYS AND BOAT STALLS:		100.00	189,038.31	185,120.00	3,918.31-	102.12
BUOYS AND BOAT STALLS						
40-52-10-51100	HARBORMASTER SALARY	1,352.62	8,512.69	19,195.00	10,682.31	44.35
40-52-10-51200	PIERS WAGES	.00	.00	.00	.00	.00
40-52-10-51340	HARBOR LIFE INSURANCE	.00	.00	.00	.00	.00
40-52-10-51345	HARBOR HEALTH INSURANCE	.00	.00	.00	.00	.00
40-52-10-51360	HARBOR RETIREMENT EXP	90.63	570.24	1,286.00	715.76	44.34
40-52-10-51520	HARBOR SOCIAL SECURITY	103.47	651.21	1,468.00	816.79	44.36
40-52-10-52110	PIER MAINTENANCE CONTRACT	.00	18,797.50	37,000.00	18,202.50	50.80
40-52-10-52640	BUOYS & BOAT STALLS-REPAIRS	113.42	39,122.38	6,000.00	33,122.38-	652.04
40-52-10-53140	LIABILITY & PROPERTY INSURANCE	.00	493.62	750.00	256.38	65.82
40-52-10-53510	EQUIP MAINT SUPP-BUOYS,STALLS	860.00	1,357.83	1,200.00	157.83-	113.15
40-52-10-53980	WEST PIER REPLACEMENT FUND	.00	.00	.00	.00	.00
40-52-10-53990	BUOY/STALL MISC. EXPENSES	.00	670.34	.00	670.34-	.00
40-52-10-58000	PIER/SLIPS OUTLAY	.00	1,800.00	.00	1,800.00-	.00
Total BUOYS AND BOAT STALLS:		2,520.14	71,975.81	66,899.00	5,076.81-	107.59
BOAT LAUNCH						
40-52-11-46000	LAUNCH RAMP OVERAGE/SHORTAG	4.00-	4.03-	.00	4.03	.00
40-52-11-46750	LAUNCH PASS FEES	.00	5,782.11	6,500.00	717.89	88.96
40-52-11-46760	BOAT LAUNCH RAMP INCOME	3,516.60	28,678.64	33,000.00	4,321.36	86.90
Total BOAT LAUNCH:		3,512.60	34,456.72	39,500.00	5,043.28	87.23
BOAT LAUNCH						
40-52-11-51200	LAUNCH RAMP WAGES	3,153.14	13,661.45	12,000.00	1,661.45-	113.85
40-52-11-51520	LAUNCH RAMP SOC SEC	241.24	1,045.13	918.00	127.13-	113.85
40-52-11-52520	LAUNCH RAMP REPAIRS	.00	905.50	500.00	405.50-	181.10
40-52-11-53520	LAUNCH RAMP MAINT SUPPLIES	.00	710.93	800.00	89.07	88.87
40-52-11-53620	LAUNCH RAMP MAINT SERVICE COS	.00	.00	.00	.00	.00
40-52-11-53990	LAUNCH RAMP MISCELLANEOUS	.00	544.88	400.00	144.88-	136.22
40-52-11-58100	LAUNCH RAMP OUTLAY	.00	1,227.90	.00	1,227.90-	.00
Total BOAT LAUNCH:		3,394.38	18,095.79	14,618.00	3,477.79-	123.79
Total BUOYS AND BOAT STALLS:		9,527.12	313,566.63	306,137.00	7,429.63-	102.43

Account Number	Account Title	2018-18 Period Actual	2018-18 Current year Actual	Current year Budget	Variance Current year	% of Budget
BEACH						
BEACH						
40-54-10-43660	DNR LAKE PATROL GRANT	.00	19,927.92	25,500.00	5,572.08	78.15
40-54-10-46100	MISC BEACH REVENUE	.00	384.31	400.00	15.69	96.08
40-54-10-46730	BEACH REVENUE	276,550.88	394,540.46	385,000.00	9,540.46-	102.48
40-54-10-46740	BEACH PASS RESIDENTS	1,146.76-	21,119.00	22,500.00	1,381.00	93.86
40-54-10-46750	BEACH PASS - SEASONAL	473.92	1,055.90	.00	1,055.90-	.00
Total BEACH:		275,878.04	437,027.59	433,400.00	3,627.59-	100.84
BEACH						
40-54-10-51200	BEACH MTCE WAGES	1,134.18	3,640.52	4,500.00	859.48	80.90
40-54-10-51250	BEACH MTCE OVERTIME WAGES	444.26	1,533.15	2,000.00	466.85	76.66
40-54-10-51260	BEACH SEASONAL WAGES	4,228.45	47,084.74	50,000.00	2,915.26	94.17
40-54-10-51340	BEACH LIFE INS	.00	.00	.00	.00	.00
40-54-10-51345	BEACH HEALTH INSURANCE	.00	.00	.00	.00	.00
40-54-10-51360	BEACH MTCE RETIREMENT FUND	105.74	346.71	470.00	123.29	73.77
40-54-10-51520	BEACH SOCIAL SECURITY	437.77	3,979.11	4,440.00	460.89	89.62
40-54-10-52210	BEACH TELEPHONE	11.83	134.33	500.00	365.67	26.87
40-54-10-52220	BEACH ELECTRIC	594.36	4,129.48	5,000.00	870.52	82.59
40-54-10-52640	LAKE SPRAYING	.00	4,950.00	4,900.00	50.00-	101.02
40-54-10-53100	BEACH OFFICE SUPPLIES	4.70	4,313.61	4,000.00	313.61-	107.84
40-54-10-53130	WORKER'S COMPENSATION INS	.00	3,091.53	6,500.00	3,408.47	47.56
40-54-10-53140	LIABILITY & PROPERTY INSURANCE	.00	4,468.93	4,600.00	131.07	97.15
40-54-10-53400	LUKE OPERATING AND CC EXP	16,885.54	20,497.54	18,700.00	1,797.54-	109.61
40-54-10-53520	BEACH MAINTENANCE SUPPLIES	696.35	6,919.04	6,000.00	919.04-	115.32
40-54-10-53620	BEACH MAINTENANCE SERVICE COS	300.00	1,538.38	5,000.00	3,461.62	30.77
40-54-10-53720	BEACH DREDGING	.00	.00	.00	.00	.00
40-54-10-53990	BEACH MISCELLANEOUS	.00	2,110.37	2,400.00	289.63	87.93
40-54-10-57200	WATER SAFETY PATROL	.00	34,955.00	34,955.00	.00	100.00
40-54-10-57210	GLAKE LAW ENFORCEMENT AGENCY	.00	46,217.36	46,000.00	217.36-	100.47
40-54-10-57300	GLAKE ENVIRONMENTAL AGENCY	.00	15,000.00	20,000.00	5,000.00	75.00
40-54-10-57350	GENEVA LAKE LEVEL CORP	.00	4,320.00	4,320.00	.00	100.00
40-54-10-57400	LAKE USE COMMISSION	.00	750.00	750.00	.00	100.00
40-54-10-57800	VENETIAN FESTIVAL FIREWORKS	.00	10,000.00	10,000.00	.00	100.00
40-54-10-58000	OUTLAY - BEACH EQUIPMENT	.00	.00	.00	.00	.00
40-54-10-58100	OUTLAY-BLDG & GROUNDS	.00	21,500.00	.00	21,500.00-	.00
Total BEACH:		24,843.18	241,479.80	235,035.00	6,444.80-	102.74
Total BEACH:		300,721.22	678,507.39	668,435.00	10,072.39-	101.51
UPPER RIVIERA						
UPPER RIVIERA						
40-55-10-46390	ONLINE CONVENIENCE FEES	.00	.00	.00	.00	.00
40-55-10-46740	UPPER RIVIERA REVENUE	17,505.78	129,349.60	155,000.00	25,650.40	83.45
40-55-10-46750	UPPER RIVIERA CATERING REV	3,508.68	13,835.83	26,000.00	12,164.17	53.21
Total UPPER RIVIERA:		21,014.46	143,185.43	181,000.00	37,814.57	79.11
UPPER RIVIERA						
40-55-10-51200	RIVIERA MTCE WAGES	5,324.11	35,419.96	50,710.00	15,290.04	69.85
40-55-10-51250	RIVIERA MTCE OVERTIME	1,778.64	6,697.81	11,000.00	4,302.19	60.89
40-55-10-51260	RIVIERA SECURITY WAGES	1,518.87	8,501.73	19,000.00	10,498.27	44.75
40-55-10-51340	RIVIERA MTCE LIFE INSURANCE	4.51	42.58	75.00	32.42	56.77
40-55-10-51345	RIVIERA MTCE HEALTH INSURANCE	.00	.00	.00	.00	.00

Account Number	Account Title	2018-18 Period Actual	2018-18 Current year Actual	Current year Budget	Variance Current year	% of Budget
40-55-10-51360	RIVIERA MTCE RETIREMENT FUND	475.91	2,821.12	4,000.00	1,178.88	70.53
40-55-10-51520	RIVIERA SOCIAL SECURITY	592.14	3,480.02	6,174.00	2,693.98	56.37
40-55-10-52160	PROF SERVICES - SOFTWARE	.00	.00	.00	.00	.00
40-55-10-52210	TELEPHONE EXPENSE	57.10	542.88	800.00	257.12	67.86
40-55-10-52240	UPPER RIVIERA GAS HEAT	82.89	2,701.03	4,000.00	1,298.97	67.53
40-55-10-52260	UPPER RIV WATER & SEWER BILLS	.00	2,220.27	2,800.00	579.73	79.30
40-55-10-52400	UPPER RIVIERA REPAIRS	285.00	659.42	3,000.00	2,340.58	21.98
40-55-10-52410	DAMAGES-UPPER RIVIERA RENTALS	.00	.00	.00	.00	.00
40-55-10-53100	UPPER RIVIERA BROCHURES	.00	.00	.00	.00	.00
40-55-10-53120	POSTAGE EXPENSE	.00	57.14	200.00	142.86	28.57
40-55-10-53160	PUBLICATIONS & PROMOTIONS	.00	.00	2,500.00	2,500.00	.00
40-55-10-53500	BLDG MAINT SUPPLIES-UPPER RIV	21.98	469.50	6,000.00	5,530.50	7.83
40-55-10-53600	UPPER RIVIERA MAINTENANCE	114.00	8,600.03	6,000.00	2,600.03-	143.33
Total UPPER RIVIERA:		10,255.15	72,213.49	116,259.00	44,045.51	62.11
LOWER RIVIERA CONCOURSE						
40-55-20-46790	RIVIERA CONCOURSE ELECTRIC	.00	4,831.57	10,000.00	5,168.43	48.32
40-55-20-46900	RIVIERA ATM REVENUE	.00	.00	.00	.00	.00
40-55-20-48200	RIVIERA CONCOURSE LEASES	8,080.75	103,735.84	104,000.00	264.16	99.75
40-55-20-48250	DONATIONS-FOUNTAIN	363.27	1,264.53	1,350.00	85.47	93.67
Total LOWER RIVIERA CONCOURSE:		8,444.02	109,831.94	115,350.00	5,518.06	95.22
LOWER RIVIERA CONCOURSE						
40-55-20-51200	LAKEFRONT SECURITY PD WAGES	2,176.88	15,474.39	17,500.00	2,025.61	88.43
40-55-20-51360	LAKEFRONT SECURITY PD RETIREM	.00	.00	952.00	952.00	.00
40-55-20-51520	LAKEFRONT SECURITY PD FICA	166.53	1,183.84	1,340.00	156.16	88.35
40-55-20-52210	RIVIERA ELEVATOR PHONE EXPENS	22.63	204.23	350.00	145.77	58.35
40-55-20-52260	LOWER RIV WATER & SEWER BILLS	.00	5,206.77	5,000.00	206.77-	104.14
40-55-20-52400	LOWER RIVIERA REPAIRS	.00	215.79	10,000.00	9,784.21	2.16
40-55-20-52410	DAMAGES-LOWER RIVIERA RENTALS	.00	.00	.00	.00	.00
40-55-20-53140	LIABILITY & PROPERTY INSURANCE	.00	4,096.53	8,000.00	3,903.47	51.21
40-55-20-53500	BLDG MAINT SUPPLIES-LOWER RIV	618.59	2,876.89	10,000.00	7,123.11	28.77
40-55-20-53550	FOUNTAIN MAINT EXP	270.00	1,026.40	2,000.00	973.60	51.32
40-55-20-53600	RIV MAINTENANCE SERVICE COSTS	30.00	2,146.47	8,000.00	5,853.53	26.83
40-55-20-53990	MISCELLANEOUS EXPENSES	.00	.00	1,000.00	1,000.00	.00
40-55-20-58250	LG BEAUTIFICATION EXPENSES	.00	.00	.00	.00	.00
40-55-20-59300	TRANSFER TO GENERAL FUND	.00	.00	526,286.00	526,286.00	.00
40-55-20-59310	TRANSFER TO TID #4	.00	.00	.00	.00	.00
40-55-20-59350	TRANSFER TO CAPITAL PROJECTS	.00	.00	39,045.00	39,045.00	.00
Total LOWER RIVIERA CONCOURSE:		3,284.63	32,431.31	629,473.00	597,041.69	5.15
RIVIERA PIERS AND DOCKS						
40-55-30-46780	RIVIERA DOCKS MAINTENANCE	.00	.00	.00	.00	.00
40-55-30-48210	RIVIERA DOCKS LEASES	17,230.48	148,418.31	147,414.00	1,004.31-	100.68
40-55-30-48220	BUOY & SLIP LEASES	.00	83,016.00	80,000.00	3,016.00-	103.77
Total RIVIERA PIERS AND DOCKS:		17,230.48	231,434.31	227,414.00	4,020.31-	101.77
RIVIERA PIERS AND DOCKS						
40-55-30-52220	PIER ELECTRIC	4,718.98	27,594.19	39,500.00	11,905.81	69.86
40-55-30-52640	PIER REPAIRS	.00	17,382.41	5,000.00	12,382.41-	347.65

Account Number	Account Title	2018-18 Period Actual	2018-18 Current year Actual	Current year Budget	Variance Current year	% of Budget
	Total RIVIERA PIERS AND DOCKS:	4,718.98	44,976.60	44,500.00	476.60-	101.07
	Total UPPER RIVIERA:	64,947.72	634,073.08	1,313,996.00	679,922.92	48.26
	LAKEFRONT OPERATIONS Revenue Total:	326,179.60	1,144,974.30	1,181,784.00	36,809.70	96.89
	LAKEFRONT OPERATIONS Expenditure Total:	49,016.46	481,172.80	1,106,784.00	625,611.20	43.47
	Net Total LAKEFRONT OPERATIONS:	277,163.14	663,801.50	75,000.00	588,801.50-	885.07

Account Number	Account Title	2018-18 Period Actual	2018-18 Current year Actual	Current year Budget	Variance Current year	% of Budget
PARKING						
PARKING						
PARKING						
42-34-50-46100	PARKING MISC REVENUE	1,860.00-	529.26	700.00	170.74	75.61
42-34-50-46320	PARKING TICKET PENALTIES	5,815.00	59,825.01	45,000.00	14,825.01-	132.94
42-34-50-46330	PARKING STALL COLLECTIONS	116,816.59-	1,173,980.68	1,294,663.00	120,682.32	90.68
42-34-50-46340	PARKING STALL TICKETS	18,230.00	170,459.50	175,000.00	4,540.50	97.41
42-34-50-46350	PARKING TICKETS-COLL AGENCY	1,653.06	23,455.15	25,000.00	1,544.85	93.82
42-34-50-46360	PARKING STICKERS-WALCO,OVER 4	151.66	10,736.00	10,000.00	736.00-	107.36
42-34-50-46370	PARKING LOT PERMITS	.00	7,583.00	6,000.00	1,583.00-	126.38
42-34-50-46380	BUSINESS PARKING PASSES	.00	5,511.95	3,500.00	2,011.95-	157.48
42-34-50-46390	ONLINE CONVENIENCE FEES	.00	.00	.00	.00	.00
42-34-50-46400	RESERVED PARKING PERMITS/BAGS	2,236.97	7,142.61	5,000.00	2,142.61-	142.85
42-34-50-46410	PARKING APP NET COLLECTIONS	9,083.75	35,620.72	20,000.00	15,620.72-	178.10
42-34-50-46900	MISC SALES	23.70	901.80	1,000.00	98.20	90.18
42-34-50-48110	INTEREST INCOME	29.54	1,947.07	2,000.00	52.93	97.35
42-34-50-49100	APPL OF PRIOR YR APPROPRIATION	.00	.00	50,000.00	50,000.00	.00
Total PARKING:		81,452.91-	1,497,692.75	1,637,863.00	140,170.25	91.44
PARKING						
42-34-50-51100	PARKING SALARY	6,601.86	44,015.93	55,882.00	11,866.07	78.77
42-34-50-51160	PARKING WAGES-SHARED	21,356.24	63,282.06	77,073.00	13,790.94	82.11
42-34-50-51200	PARKING PT WAGES	703.49	74,087.13	100,000.00	25,912.87	74.09
42-34-50-51320	PARKING HEALTH INS	8,874.41	74,668.53	99,150.00	24,481.47	75.31
42-34-50-51340	PARKING LIFE INSURANCE	47.13	448.98	400.00	48.98-	112.25
42-34-50-51345	PARKING HEALTH INSURANCE	.00	.00	.00	.00	.00
42-34-50-51360	PARKING RETIREMENT FUND	1,250.00	8,352.37	9,616.00	1,263.63	86.86
42-34-50-51370	PARKING DISABILITY INS	16.81	168.10	210.00	41.90	80.05
42-34-50-51380	PARKING UNIFORMS	.00	595.11	1,000.00	404.89	59.51
42-34-50-51520	PARKING SOCIAL SECURITY	2,121.04	13,498.50	15,645.00	2,146.50	86.28
42-34-50-52160	LUKE CC AND COLLECTION FEES	8,612.41-	48,867.76	52,000.00	3,132.24	93.98
42-34-50-52200	PARKING LOT PLANTING/MAINT	5,056.68	15,256.73	20,000.00	4,743.27	76.28
42-34-50-52210	TELEPHONE EXPENSE	1,192.70	10,252.91	18,000.00	7,747.09	56.96
42-34-50-52500	KIOSK REPAIRS/SUPPLIES	240.13	6,130.33	10,000.00	3,869.67	61.30
42-34-50-52650	POLICE DEPT SERVICES	.00	.00	.00	.00	.00
42-34-50-53100	OFFICE SUPPLIES	81.22	2,609.21	1,500.00	1,109.21-	173.95
42-34-50-53120	POSTAGE EXPENSE	1,197.72	2,466.88	3,200.00	733.12	77.09
42-34-50-53130	WORKERS COMPENSATION INSURA	.00	1,958.33	4,500.00	2,541.67	43.52
42-34-50-53140	LIABILITY & PROPERTY INSURANCE	.00	1,367.85	3,800.00	2,432.15	36.00
42-34-50-53320	CONFERENCES/TRAINING	.00	1,014.24	900.00	114.24-	112.69
42-34-50-53400	OPERATING SUPPLIES-ENFORCEME	448.12	3,343.47	8,000.00	4,656.53	41.79
42-34-50-53410	VEHICLE SUPPLIES-FUEL	.00	908.54	1,000.00	91.46	90.85
42-34-50-53510	VEHICLE/EQUIPMENT MAINT	2,260.53	3,512.14	1,200.00	2,312.14-	292.68
42-34-50-53990	PARKING MISC EXPENSES	3,857.71	6,590.84	7,000.00	409.16	94.15
42-34-50-54500	SUPPORT CONTRACTS	2,544.00	88,844.00	105,000.00	16,156.00	84.61
42-34-50-58500	PARKING LOT REV SHARE	.00	.00	16,000.00	16,000.00	.00
42-34-50-58700	OUTLAY-PARKING	.00	.00	50,000.00	50,000.00	.00
42-34-50-59300	TRANSFER TO TIF	.00	.00	.00	.00	.00
42-34-50-59400	TRANSFER TO CAPITAL PROJECTS	.00	.00	.00	.00	.00
42-34-50-59500	TRANSFER TO GENERAL FUND	.00	.00	901,787.00	901,787.00	.00
42-34-50-59550	TRANSFER FROM RESERVE TO GF	.00	.00	.00	.00	.00
Total PARKING:		49,237.38	472,239.94	1,562,863.00	1,090,623.06	30.22

Account Number	Account Title	2018-18 Period Actual	2018-18 Current year Actual	Current year Budget	Variance Current year	% of Budget
Total PARKING:		32,215.53-	1,969,932.69	3,200,726.00	1,230,793.31	61.55
PARKING Revenue Total:		81,452.91-	1,497,692.75	1,637,863.00	140,170.25	91.44
PARKING Expenditure Total:		49,237.38	472,239.94	1,562,863.00	1,090,623.06	30.22
Net Total PARKING:		130,690.29-	1,025,452.81	75,000.00	950,452.81-	1,367.27

Account Number	Account Title	2018-18 Period Actual	2018-18 Current year Actual	Current year Budget	Variance Current year	% of Budget
CAPITAL PROJECTS						
CAPITAL PROJECTS						
CAPITAL PROJECTS						
43-00-00-48110	INTEREST EARNED	3.47	193.25	.00	193.25-	.00
43-00-00-49000	PROCEEDS FROM BORROWING	.00	500,000.00	1,273,042.00	773,042.00	39.28
Total CAPITAL PROJECTS:		3.47	500,193.25	1,273,042.00	772,848.75	39.29
CAPITAL PROJECTS						
43-00-00-52160	ISSUANCE COSTS	.00	.00	.00	.00	.00
Total CAPITAL PROJECTS:		.00	.00	.00	.00	.00
Total CAPITAL PROJECTS:		3.47	500,193.25	1,273,042.00	772,848.75	39.29
CITY HALL CAPITAL PROJECTS						
CITY HALL CAPITAL PROJECTS						
43-16-10-17010	CITY HALL CAPITAL PROJECTS	.00	9,349.70	5,000.00	4,349.70-	186.99
Total CITY HALL CAPITAL PROJECTS:		.00	9,349.70	5,000.00	4,349.70-	186.99
Total CITY HALL CAPITAL PROJECTS:		.00	9,349.70	5,000.00	4,349.70-	186.99
PD CAPITAL PROJECTS						
PD CAPITAL PROJECTS						
43-21-00-17010	PD CAPITAL PROJECTS	.00	13,029.43	22,759.00	9,729.57	57.25
Total PD CAPITAL PROJECTS:		.00	13,029.43	22,759.00	9,729.57	57.25
Total PD CAPITAL PROJECTS:		.00	13,029.43	22,759.00	9,729.57	57.25
FIRE DEPT CAPITAL PROJECTS						
FIRE DEPT CAPITAL PROJECTS						
43-22-00-17010	FD CAPITAL PROJECTS	.00	.00	.00	.00	.00
Total FIRE DEPT CAPITAL PROJECTS:		.00	.00	.00	.00	.00
Total FIRE DEPT CAPITAL PROJECTS:		.00	.00	.00	.00	.00
STREET IMPROVEMENT PROGRAM						
STREET IMPROVEMENT PROGRAM						
43-32-10-17010	2018/2019 STREET IMP PROGRAM	750.00	700,877.00	1,066,339.00	365,462.00	65.73
Total STREET IMPROVEMENT PROGRAM:		750.00	700,877.00	1,066,339.00	365,462.00	65.73
Total STREET IMPROVEMENT PROGRAM:		750.00	700,877.00	1,066,339.00	365,462.00	65.73
PARKS CAPITAL PROJECTS						
PARKS CAPITAL PROJECTS						
43-52-00-53000	PARKS CAPITAL PROJECT	.00	171,386.92	178,944.00	7,557.08	95.78
Total PARKS CAPITAL PROJECTS:		.00	171,386.92	178,944.00	7,557.08	95.78
Total PARKS CAPITAL PROJECTS:		.00	171,386.92	178,944.00	7,557.08	95.78
CAPITAL PROJECTS Revenue Total:		3.47	500,193.25	1,273,042.00	772,848.75	39.29

Account Number	Account Title	2018-18 Period Actual	2018-18 Current year Actual	Current year Budget	Variance Current year	% of Budget
CAPITAL PROJECTS Expenditure Total:		750.00	894,643.05	1,273,042.00	378,398.95	70.28
Net Total CAPITAL PROJECTS:		746.53-	394,449.80-	.00	394,449.80	.00

Account Number	Account Title	2018-18 Period Actual	2018-18 Current year Actual	Current year Budget	Variance Current year	% of Budget
CEMETERY OPERATIONS						
CEMETERY OPERATIONS						
CEMETERY OPERATIONS						
48-00-00-41110	PROPERTY TAX LEVY	.00	135,000.00	135,000.00	.00	100.00
48-00-00-46100	MISC REVENUE	.00	2,685.00	1,265.00	1,420.00-	212.25
48-00-00-46540	SALE OF GRAVES/NICHES	575.00	8,350.00	12,000.00	3,650.00	69.58
48-00-00-46550	FOUNDATIONS/STAKE-OUTS	.00	165.30	700.00	534.70	23.61
48-00-00-46560	BURIAL INTERNMENTS	2,600.00	23,150.00	26,000.00	2,850.00	89.04
48-00-00-48110	INVESTMENT INCOME	.00	.00	.00	.00	.00
48-00-00-49100	APPL OF PRIOR YEARS APPROP	.00	.00	.00	.00	.00
48-00-00-49200	TRANSFER FROM GENERAL FUND	.00	.00	.00	.00	.00
48-00-00-49400	TRANSFER FROM PERPETUAL CARE	1,801.59	4,772.01	13,000.00	8,227.99	36.71
Total CEMETERY OPERATIONS:		4,976.59	174,122.31	187,965.00	13,842.69	92.64
CEMETERY OPERATIONS						
48-00-00-51200	CEM WAGES	15,098.33	76,608.90	95,158.00	18,549.10	80.51
48-00-00-51250	CEM OVERTIME	181.95	2,198.60	2,400.00	201.40	91.61
48-00-00-51260	CEM SEASONAL LABOR	1,883.53	10,783.65	8,000.00	2,783.65-	134.80
48-00-00-51320	CEM HEALTH/DENTAL INS	2,857.50	24,299.34	33,000.00	8,700.66	73.63
48-00-00-51340	CEM LIFE INSURANCE EXP	38.61	336.12	375.00	38.88	89.63
48-00-00-51345	CEM HEALTH INSURANCE	.00	.00	.00	.00	.00
48-00-00-51360	CEM RETIREMENT EXPENSE	1,023.77	5,278.07	6,376.00	1,097.93	82.78
48-00-00-51370	CEM DISABILITY EXP	29.16	291.60	370.00	78.40	78.81
48-00-00-51380	CEM UNIFORM ALLOWANCE	.00	.00	1,200.00	1,200.00	.00
48-00-00-51520	CEM FICA EXPENSE	1,285.33	6,701.47	8,075.00	1,373.53	82.99
48-00-00-52160	CEM PROFESSIONAL SERVICES	.00	.00	2,400.00	2,400.00	.00
48-00-00-52210	CEM TELEPHONE EXP	34.46	343.09	600.00	256.91	57.18
48-00-00-52220	CEM ELECTRICITY EXP	45.77	1,994.84	2,000.00	5.16	99.74
48-00-00-52240	CEM GAS HEAT EXP	25.25	496.46	1,000.00	503.54	49.65
48-00-00-52260	CEM WATER/SEWER EXP	80.00	992.77	300.00	692.77-	330.92
48-00-00-52400	CEM BUILDING REPAIRS	.00	260.04	1,500.00	1,239.96	17.34
48-00-00-52500	CEM EQUIP MAINT/REPAIRS	.00	1,562.48	3,000.00	1,437.52	52.08
48-00-00-53100	CEM OFFICE SUPPLIES	.00	49.63	150.00	100.37	33.09
48-00-00-53120	CEM POSTAGE EXP	.00	.00	40.00	40.00	.00
48-00-00-53130	CEM WORKERS COMP INS	.00	3,841.88	6,500.00	2,658.12	59.11
48-00-00-53140	CEM LIABILITY/PROPERTY INS	.00	1,919.56	3,000.00	1,080.44	63.99
48-00-00-53400	CEM OPERATING SUPPLIES	.00	301.12	1,000.00	698.88	30.11
48-00-00-53410	CEM FUEL EXPENSE	.00	3,077.13	5,700.00	2,622.87	53.98
48-00-00-53500	CEM BLDG MAINT SUPPLIES	34.95	479.06	500.00	20.94	95.81
48-00-00-53510	CEM VEHICLE MAINT/REPAIR	39.90	1,597.14	3,000.00	1,402.86	53.24
48-00-00-53600	CEM MAINT SERVICE EXP	.00	36.00	1,700.00	1,664.00	2.12
48-00-00-53620	CEM GROUNDS/LANDSCAPING	.00	791.40	800.00	8.60	98.93
48-00-00-53990	CEM MISC EXP	.00	953.25	300.00	653.25-	317.75
48-00-00-54200	CEM GRAVES/FOUNDATIONS	.00	285.84	1,400.00	1,114.16	20.42
48-00-00-54300	CEM COLUMBARIUM EXPENSES	.00	.00	900.00	900.00	.00
48-00-00-58100	CEM EQUIPMENT OUTLAY	.00	.00	8,000.00	8,000.00	.00
Total CEMETERY OPERATIONS:		22,658.51	145,479.44	198,744.00	53,264.56	73.20
Total CEMETERY OPERATIONS:		27,635.10	319,601.75	386,709.00	67,107.25	82.65
CEMETERY OPERATIONS Revenue Total:		4,976.59	174,122.31	187,965.00	13,842.69	92.64
CEMETERY OPERATIONS Expenditure Total:		22,658.51	145,479.44	198,744.00	53,264.56	73.20

Account Number	Account Title	2018-18 Period Actual	2018-18 Current year Actual	Current year Budget	Variance Current year	% of Budget
	Net Total CEMETERY OPERATIONS:	17,681.92-	28,642.87	10,779.00-	39,421.87-	265.73-

Account Number	Account Title	2018-18 Period Actual	2018-18 Current year Actual	Current year Budget	Variance Current year	% of Budget
EQUIPMENT REPLACEMENT FUND						
EQUIPMENT REPLACEMENT FUND						
EQUIPMENT REPLACEMENT FUND						
50-00-00-41110	PROPERTY TAX LEVY	.00	677,990.00	677,990.00	.00	100.00
50-00-00-48110	INTEREST EARNED	3,583.98	30,352.24	.00	30,352.24-	.00
50-00-00-48300	SALE OF MISC EQUIPMENT	.00	.00	.00	.00	.00
50-00-00-49100	APPL. PRIOR YR APPROPRIATIONS	.00	.00	.00	.00	.00
50-00-00-49400	TRANSFER FROM GENERAL FUND	.00	.00	.00	.00	.00
Total EQUIPMENT REPLACEMENT FUND:		3,583.98	708,342.24	677,990.00	30,352.24-	104.48
EQUIPMENT REPLACEMENT FUND						
50-00-00-58000	MISC/COMP EQUIP PURCHASES	.00	56,834.19	172,000.00	115,165.81	33.04
Total EQUIPMENT REPLACEMENT FUND:		.00	56,834.19	172,000.00	115,165.81	33.04
Total EQUIPMENT REPLACEMENT FUND:		3,583.98	765,176.43	849,990.00	84,813.57	90.02
POLICE DEPARTMENT						
POLICE DEPARTMENT						
50-21-00-48300	SALE OF POLICE EQUIPMENT	.00	602.80	.00	602.80-	.00
Total POLICE DEPARTMENT:		.00	602.80	.00	602.80-	.00
POLICE DEPARTMENT						
50-21-00-58000	POLICE EQUIPMENT PURCHASES	.00	114,051.91	133,470.00	19,418.09	85.45
Total POLICE DEPARTMENT:		.00	114,051.91	133,470.00	19,418.09	85.45
Total POLICE DEPARTMENT:		.00	114,654.71	133,470.00	18,815.29	85.90
FIRE DEPARTMENT						
FIRE DEPARTMENT						
50-22-00-48300	SALE OF FIRE EQUIPMENT	.00	.00	.00	.00	.00
Total FIRE DEPARTMENT:		.00	.00	.00	.00	.00
FIRE DEPARTMENT						
50-22-00-58000	FIRE EQUIPMENT PURCHASES	21,345.00	437,912.45	482,429.00	44,516.55	90.77
Total FIRE DEPARTMENT:		21,345.00	437,912.45	482,429.00	44,516.55	90.77
Total FIRE DEPARTMENT:		21,345.00	437,912.45	482,429.00	44,516.55	90.77
EMERGENCY MANAGEMENT						
EMERGENCY MANAGEMENT						
50-29-00-58000	EMERG MGMT EQUIPMENT PURCHA	.00	17,143.68	30,000.00	12,856.32	57.15
Total EMERGENCY MANAGEMENT:		.00	17,143.68	30,000.00	12,856.32	57.15
Total EMERGENCY MANAGEMENT:		.00	17,143.68	30,000.00	12,856.32	57.15
DPW						
DPW						
50-32-00-48300	SALE OF DPW EQUIPMENT	.00	.00	.00	.00	.00

Account Number	Account Title	2018-18 Period Actual	2018-18 Current year Actual	Current year Budget	Variance Current year	% of Budget
Total DPW:		.00	.00	.00	.00	.00
DPW						
50-32-00-58000	DPW EQUIPMENT PURCHASES	25,057.47	25,057.47	322,000.00	296,942.53	7.78
Total DPW:		25,057.47	25,057.47	322,000.00	296,942.53	7.78
Total DPW:		25,057.47	25,057.47	322,000.00	296,942.53	7.78
CEMETERY						
CEMETERY						
50-48-00-48300	SALE OF CEMETERY EQUIPMENT	.00	.00	.00	.00	.00
Total CEMETERY:		.00	.00	.00	.00	.00
CEMETERY						
50-48-00-58000	CEMETERY EQUIPMENT REPLACEME	.00	5,669.19	15,200.00	9,530.81	37.30
Total CEMETERY:		.00	5,669.19	15,200.00	9,530.81	37.30
Total CEMETERY:		.00	5,669.19	15,200.00	9,530.81	37.30
EQUIPMENT REPLACEMENT FUND Revenue Total:		3,583.98	708,945.04	677,990.00	30,955.04-	104.57
EQUIPMENT REPLACEMENT FUND Expenditure Total:		46,402.47	656,668.89	1,155,099.00	498,430.11	56.85
Net Total EQUIPMENT REPLACEMENT FUND:		42,818.49-	52,276.15	477,109.00-	529,385.15-	10.96-

Account Number	Account Title	2018-18 Period Actual	2018-18 Current year Actual	Current year Budget	Variance Current year	% of Budget
LIBRARY						
LIBRARY						
LIBRARY						
99-00-00-41110	PROPERTY TAX LEVY	.00	456,800.00	456,800.00	.00	100.00
99-00-00-43540	GRANTS	.00	.00	.00	.00	.00
99-00-00-45120	LIBRARY FINES AND FEES	348.23	10,664.57	15,000.00	4,335.43	71.10
99-00-00-45150	COPIES,PRINTS,FAXES	341.46	2,631.88	.00	2,631.88-	.00
99-00-00-46000	CASH DRAWER OVERAGES/UNDERA	.00	.00	.00	.00	.00
99-00-00-46210	LIBRARY MISC REVENUE	.00	650.45	500.00	150.45-	130.09
99-00-00-47310	KENOSHA COUNTY REVENUES	.00	3,466.00	6,932.00	3,466.00	50.00
99-00-00-47320	RACINE COUNTY REVENUES	.00	1,473.00	2,946.00	1,473.00	50.00
99-00-00-47330	WALWORTH COUNTY REVENUES	.00	118,766.50	237,533.00	118,766.50	50.00
99-00-00-47340	WAUKESHA COUNTY REVENUES	.00	18.50	37.00	18.50	50.00
99-00-00-47350	ROCK COUNTY (ARROWHEAD) REV	.00	70.00	140.00	70.00	50.00
99-00-00-47360	JEFFERSON COUNTY REVENUES	.00	.00	.00	.00	.00
99-00-00-48110	INTEREST EARNED	165.08	3,041.99	500.00	2,541.99-	608.40
99-00-00-48120	DIVIDEND INCOME	.00	.00	.00	.00	.00
99-00-00-48140	PORTFOLIO GAINS/LOSSES	.00	.00	.00	.00	.00
99-00-00-48190	DISCOUNTS EARNED	1.45	17.24	.00	17.24-	.00
99-00-00-48400	INSURANCE REIMBURSEMENTS	.00	.00	.00	.00	.00
99-00-00-48920	DONATIONS	.00	.00	.00	.00	.00
99-00-00-49000	PROCEEDS FROM BORROWING	.00	.00	.00	.00	.00
99-00-00-49100	APPL OF PR YR APPROPRIATIONS	.00	.00	.00	.00	.00
99-00-00-49500	TRANSFER FROM GENERAL FUND	.00	.00	.00	.00	.00
Total LIBRARY:		856.22	597,600.13	720,388.00	122,787.87	82.96
LIBRARY						
99-00-00-51100	LIBRARY FT SALARIES	23,388.32	148,238.68	187,361.00	39,122.32	79.12
99-00-00-51200	LIBRARY PT WAGES	17,960.25	125,241.05	175,578.00	50,336.95	71.33
99-00-00-51320	HEALTH/DENTAL INSURANCE	7,455.83	63,754.29	118,620.00	54,865.71	53.75
99-00-00-51340	LIFE INSURANCE	62.85	617.40	634.00	16.60	97.38
99-00-00-51345	LIBRARY HEALTH INSURANCE	.00	.00	.00	.00	.00
99-00-00-51360	RETIREMENT FUND	2,279.80	15,259.61	21,203.00	5,943.39	71.97
99-00-00-51370	LIBRARY DISABILITY PREMIUMS	56.63	566.30	672.00	105.70	84.27
99-00-00-51520	LIBRARY SOCIAL SECURITY	3,144.44	20,765.41	27,765.00	6,999.59	74.79
99-00-00-52110	GENERAL ADMIN EXPENSES	.00	3,177.50	5,000.00	1,822.50	63.55
99-00-00-52160	PROFESSIONAL SERVICES	3,625.00	10,739.72	8,000.00	2,739.72-	134.25
99-00-00-52210	LIBRARY TELEPHONE EXP	153.75	1,351.66	1,800.00	448.34	75.09
99-00-00-52220	LIBRARY UTILITIES	1,824.96	14,282.53	20,500.00	6,217.47	69.67
99-00-00-52500	LIBRARY BLDG REPAIR	.00	5,459.97	6,000.00	540.03	91.00
99-00-00-53100	LIBRARY OFFICE SUPPLIES	.00	1,058.31	1,500.00	441.69	70.55
99-00-00-53120	LIBRARY POSTAGE	39.86	463.03	500.00	36.97	92.61
99-00-00-53130	WORKERS COMP INSURANCE	.00	653.32	1,400.00	746.68	46.67
99-00-00-53140	LIABILITY & PROPERTY INSURANCE	.00	6,032.92	10,330.00	4,297.08	58.40
99-00-00-53320	STAFF CONTINUING EDUCATION	37.00	3,709.09	3,000.00	709.09-	123.64
99-00-00-53500	LIBRARY MAINT SUPPLIES	32.72	1,732.12	2,500.00	767.88	69.28
99-00-00-53600	LIBRARY BLDG MAINT SERVICES	1,756.24	21,195.50	25,000.00	3,804.50	84.78
99-00-00-53990	LIBRARY MISCELLANEOUS	.00	.00	.00	.00	.00
99-00-00-54100	LIBRARY ADULT MATERIALS	1,294.78	26,760.69	30,000.00	3,239.31	89.20
99-00-00-54110	LIBRARY YOUTH MATERIALS	1,146.41	9,827.20	15,000.00	5,172.80	65.51
99-00-00-54120	LIBRARY MAGAZINES & NEWSPAPER	.00	986.75	6,000.00	5,013.25	16.45
99-00-00-54130	LIBRARY REFERENCE MATERIALS	.00	382.98	700.00	317.02	54.71
99-00-00-54140	LIBRARY NONPRINT MATERIALS	443.81	6,142.39	10,000.00	3,857.61	61.42
99-00-00-54150	LIBRARY PROGRAMS	.00	.00	.00	.00	.00

Account Number	Account Title	2018-18 Period Actual	2018-18 Current year Actual	Current year Budget	Variance Current year	% of Budget
99-00-00-54160	USE OF DONATED FUNDS	.00	.00	.00	.00	.00
99-00-00-54170	USE OF GRANT FUNDS	.00	.00	.00	.00	.00
99-00-00-55100	LIBRARY SIRSI	71.60	17,704.02	23,000.00	5,295.98	76.97
99-00-00-55110	LIBRARY CIRCULATION SUPPLIES	.00	3,849.54	1,500.00	2,349.54-	256.64
99-00-00-55120	LIBRARY PROCESSING SUPPLIES	223.60	1,112.66	2,000.00	887.34	55.63
99-00-00-55140	LIBRARY COMPUTER HARDWARE	.00	1,224.84	3,000.00	1,775.16	40.83
99-00-00-55150	LIBRARY COMPUTER SOFTWARE	.00	.00	500.00	500.00	.00
99-00-00-55160	LIBRARY IT CONSULTING SERVICES	.00	.00	1,000.00	1,000.00	.00
99-00-00-55320	LIBRARY EQUIP LEASES & MAINT	526.11	5,320.56	7,000.00	1,679.44	76.01
99-00-00-56230	SHARED SAVINGS PRINCIPAL PYMT	.00	.00	.00	.00	.00
99-00-00-56630	SHARED SAVINGS INTEREST PYMT	.00	.00	.00	.00	.00
99-00-00-57800	LIBRARY CONTINGENCY	.00	.00	3,325.00	3,325.00	.00
Total LIBRARY:		65,523.96	517,610.04	720,388.00	202,777.96	71.85
Total LIBRARY:		66,380.18	1,115,210.17	1,440,776.00	325,565.83	77.40
LIBRARY Revenue Total:		856.22	597,600.13	720,388.00	122,787.87	82.96
LIBRARY Expenditure Total:		65,523.96	517,610.04	720,388.00	202,777.96	71.85
Net Total LIBRARY:		64,667.74-	79,990.09	.00	79,990.09-	.00
Net Grand Totals:		663,310.17-	2,818,198.82	337,888.00-	3,156,086.82-	834.06-

City of Lake Geneva
Finance, License, & Regulation Committee
October 16, 2018

Prepaid Checks

10/2/18 - 10/12/18

Total:
$47,314.26

Checks over $5,000:

$	*12,207.29*	*Lake Geneva Utility Commission - 3rd Quarter Water Bills; Special*
$	*11,930.52*	*Alliant Energy - October bills to date*
$	-	
$	-	
$	-	

Assessment payment from County

Report Criteria:
Report type: Summary
[Report].Check Issue Date = 09/26/2018,10/02/2018,10/05/2018,10/10/2018,10/01/2018
Check.Type = {<>} "Adjustment"

Check Issue Date	Check Number	Vendor Number	Payee	Amount
09/26/2018	68637	2046	ALLIANT ENERGY	56.00
09/26/2018	68638	2104	AT&T	1,864.60
09/26/2018	68639	2138	BAKER & TAYLOR	2,327.77
09/26/2018	68640	5281	CHAPMAN,ERIC & JENNIFER	20.00
09/26/2018	68641	5282	GANSBERG, DIANE	12.00
09/26/2018	68642	5207	SARAH KEISTER ARMSTRONG & ASSOCIATES	3,625.00
09/26/2018	68643	4918	TIME WARNER CABLE	63.29
09/26/2018	68644	4892	TOWN OF BURLINGTON	184.20
09/26/2018	68645	4975	US CELLULAR	537.51
09/26/2018	68646	5036	WALWORTH COUNTY TREASURER	178.67
10/02/2018	68663	2056	AMAZON	929.55
10/02/2018	68664	2273	CHASE CARD SERVICES	1,721.06
10/02/2018	68665	5265	PUBLIC ADMINISTRATION ASSOCIATES	4,121.05
10/02/2018	68666	4973	US BANK	1,951.42
10/02/2018	68667	4602	VEOLIA ENVIRONMENTAL SERVICE	91.70
10/02/2018	68668	5104	WILS	199.00
10/10/2018	68778	2046	ALLIANT ENERGY	11,930.52
10/10/2018	68779	2884	LAKE GENEVA UTILITY	12,207.29
10/10/2018	68780	2657	HE STARK AGENCY INC	334.68
10/10/2018	68781	2884	LAKE GENEVA UTILITY	882.63
10/10/2018	68782	2987	MICHAEL MILLS	239.44
10/10/2018	68783	2668	PATTY HOLWICK	24.00
10/10/2018	68784	4911	THORNBURGH, WILLIAM	36.00
10/10/2018	68785	4915	TIETZ, KATIE	39.00
10/10/2018	68786	4997	VAST DATA CONCEPTS LLC	3,397.04
10/10/2018	68787	5001	VERIZON WIRELESS	340.84
Grand Totals:				47,314.26

Summary by General Ledger Account Number

GL Account	Debit	Credit	Proof
11-00-00-12320	178.67	.00	178.67
11-00-00-21100	4.63	25,016.24-	25,011.61-
11-00-00-24530	882.63	.00	882.63
11-12-00-24280	184.20	.00	184.20
11-12-00-52210	54.81	.00	54.81
11-14-20-53990	4,121.05	.00	4,121.05
11-14-30-53310	183.54	.00	183.54
11-15-10-53100	34.95	.00	34.95
11-15-10-53320	334.16	.00	334.16
11-16-10-52210	860.56	.00	860.56
11-16-10-52220	3,731.56	.00	3,731.56
11-16-10-52260	914.08	.00	914.08
11-21-00-52210	575.96	.00	575.96

GL Account	Debit	Credit	Proof
11-21-00-53160	1,441.50	.00	1,441.50
11-21-00-53310	372.00	.00	372.00
11-21-00-53990	41.55	4.63-	36.92
11-21-00-54100	200.00	.00	200.00
11-22-00-52210	623.34	.00	623.34
11-22-00-52220	976.75	.00	976.75
11-22-00-52260	360.07	.00	360.07
11-22-00-53320	176.00	.00	176.00
11-22-00-53400	30.91	.00	30.91
11-22-00-53500	9.97	.00	9.97
11-22-00-54120	239.44	.00	239.44
11-24-00-52620	11.83	.00	11.83
11-29-00-52220	49.34	.00	49.34
11-32-10-52210	246.03	.00	246.03
11-32-10-52260	237.21	.00	237.21
11-32-10-53990	87.00	.00	87.00
11-32-14-54300	72.12	.00	72.12
11-34-10-52220	290.24	.00	290.24
11-34-10-52230	1,081.87	.00	1,081.87
11-36-00-52970	91.70	.00	91.70
11-51-10-52220	803.54	.00	803.54
11-51-10-52260	424.33	.00	424.33
11-52-00-52220	344.23	.00	344.23
11-52-00-52260	1,742.62	.00	1,742.62
11-52-00-52270	1,734.95	.00	1,734.95
11-52-00-59220	80.47	.00	80.47
11-52-01-52220	610.09	.00	610.09
11-52-01-52260	580.97	.00	580.97
40-00-00-21100	.00	8,963.44-	8,963.44-
40-54-10-46740	12.00	.00	12.00
40-54-10-52210	11.83	.00	11.83
40-54-10-53990	1,159.89	.00	1,159.89
40-55-10-52210	57.10	.00	57.10
40-55-10-52260	1,160.57	.00	1,160.57
40-55-20-52210	22.63	.00	22.63
40-55-20-52260	3,528.43	.00	3,528.43
40-55-30-52220	3,010.99	.00	3,010.99
42-00-00-21100	.00	994.63-	994.63-
42-34-50-46100	20.00	.00	20.00
42-34-50-52160	334.68	.00	334.68
42-34-50-52200	28.80	.00	28.80
42-34-50-52210	171.91	.00	171.91
42-34-50-53320	439.24	.00	439.24
48-00-00-21100	.00	3,535.45-	3,535.45-
48-00-00-52210	34.46	.00	34.46
48-00-00-52220	26.40	.00	26.40
48-00-00-52260	77.55	.00	77.55
48-00-00-58100	3,397.04	.00	3,397.04
99-00-00-21100	.00	8,809.13-	8,809.13-
99-00-00-52110	241.29	.00	241.29
99-00-00-52160	3,625.00	.00	3,625.00
99-00-00-52210	135.78	.00	135.78
99-00-00-52220	1,238.86	.00	1,238.86

GL Account	Debit	Credit	Proof
99-00-00-53120	58.07	.00	58.07
99-00-00-53320	235.00	.00	235.00
99-00-00-53500	25.97	.00	25.97
99-00-00-53600	163.59	.00	163.59
99-00-00-54100	1,338.76	.00	1,338.76
99-00-00-54110	860.57	.00	860.57
99-00-00-54140	172.42	.00	172.42
99-00-00-55120	228.99	.00	228.99
99-00-00-55140	484.83	.00	484.83
Grand Totals:	47,323.52	47,323.52-	.00

Dated: _____

Mayor: _____

City Council: _____

_____

_____

_____

_____

_____

City Recorder: _____

Report Criteria:
Report type: Summary
[Report].Check Issue Date = 09/26/2018,10/02/2018,10/05/2018,10/10/2018,10/01/2018
Check.Type = {<>} "Adjustment"

City of Lake Geneva
Finance, License, & Regulation Committee
October 16, 2018

Accounts Payable

	Fund #		
1. General Fund	11	$	77,422.72
2. Debt Service	20	$	-
3. TID #4	34	$	-
4. Lakefront	40	$	12,044.66
5. Capital Projects	43,52	$	722.00
6. Parking	42	$	112.80
7. Cemetery	48,49	$	688.68
8. Equipment Replacement	50	$	-
9. Library Fund	99	$	342.00
10. Impact Fees	45	$	42,660.00
11. Tourism Commission	47	$	-
Total All Funds			**$133,992.86**

CITY OF LAKE GENEVA
ACCOUNTS PAYABLE UNPAID ITEMS OVER $5,000

FINANCE, LICENSE, & REGULATION COMMITTEE
10/16/2018

TOTAL UNPAID ACCOUNTS PAYABLE	**$**	**133,992.86**

ITEMS > $5,000

Lake Geneva Utility Commission - Impact Fees (Townline Road, Buildings 1 & 2)	$	42,660.00
Johns Disposal - October Refuse & Recycling Service	$	39,189.57
Gage Marine - Gas Pier Repair; Install #31 Buoy	$	9,197.20
Vandewalle & Associates - September Planning Fees	$	7,733.38
Geneva Lake Museum - 2018 2nd Payment (2 of 2)	$	6,500.00
	$	-
	$	-
	$	-
Balance of Other Items	$	28,712.71

Report Criteria:
Detail report.
Invoices with totals above $0.00 included.
Only unpaid invoices included.
Invoice.Batch = "181021","181022"
Invoice Detail.GL account (2 Characters) = {<>} "61"
Invoice Detail.GL account (2 Characters) = {<>} "62"

Invoice Number	Invoice Date	Description	GL Account and Title		Net Invoice Amount
A+ GRAPHICS & PRINTING					
20834	10/01/2018	"TALES OF LAKE GENEVA" FLIE	11-70-00-57200	HISTORIC PRESERVATION	190.00
Total A+ GRAPHICS & PRINTING:					190.00
ADVANCED DISPOSAL SERVICES					
A40000009691	09/30/2018	LANDFILL USE-BULK	11-36-00-52960	SOLID WASTE-STREET DEPT	1,322.80
Total ADVANCED DISPOSAL SERVICES:					1,322.80
AURORA EAP					
18752	09/27/2018	4TH QTR 2018 FEE	11-10-20-51350	EAP PROGRAM	937.50
Total AURORA EAP:					937.50
BATZNER PEST CONTROL					
2544807	09/24/2018	PEST CONTROL-SEP	40-55-20-53600	RIV MAINTENANCE SERVICE COSTS	114.00
Total BATZNER PEST CONTROL:					114.00
BEAR GRAPHICS					
807284	09/28/2018	VOTER # SLIPS	11-14-30-53110	BALLOTS/OTHER ELECTION EXPENSE	146.62
Total BEAR GRAPHICS:					146.62
BEARINGS INC SOUTH					
62095	09/25/2018	BEARINGS-TORO #7,#8	11-32-10-53510	VEHICLE/EQUIPMENT MAINTENANCE	114.90
Total BEARINGS INC SOUTH:					114.90
BUMPER TO BUMPER AUTO PARTS					
662-396385	09/26/2018	OIL,FILTERS-LEAF WAGONS	11-32-13-54200	TREE & BRUSH-REPAIR	26.53
Total BUMPER TO BUMPER AUTO PARTS:					26.53
CES					
LKG/049660	08/24/2018	RESTROOM LIGHT BULBS	11-52-00-53500	BLDG MAINT SUPPLIES-PARKS	47.52
LKG/050541	09/28/2018	OUTSIDE LIGHT REPAIR	40-55-20-53500	BLDG MAINT SUPPLIES-LOWER RIV	59.00
Total CES:					106.52
CHRIS RIZZO					
1826-10/4	10/04/2018	MOWING VIOLATIONS-10/4	11-32-10-53440	WEED CUTTING	150.00
Total CHRIS RIZZO:					150.00
CINTAS CORP					
5011835941	09/26/2018	1ST AID KIT REFILL	11-32-10-53900	FIRST AID AND SAFETY SUPPLIES	76.71

Invoice Number	Invoice Date	Description	GL Account and Title		Net Invoice Amount
Total CINTAS CORP:					76.71
CITIES DIGITAL					
43858	09/26/2018	LASERFICHE SUPPORT-2019	11-14-30-53820	LICENSE/SUPPORT EXPENSE	833.00
Total CITIES DIGITAL:					833.00
CUMMINGS, COLLIN					
SD 10/8/18	10/08/2018	SEC DEP-BARRICADES 10/8/18	11-00-00-23530	SECURITY DEPOSITS	50.00
Total CUMMINGS, COLLIN:					50.00
DOG WASTE DEPOT					
245785	10/08/2018	DOG WASTE BAGS	11-52-00-53520	GROUNDS MAINT SUPPLIES	471.96
Total DOG WASTE DEPOT:					471.96
DOWN TO EARTH CONTRACTORS INC					
6888	09/26/2018	STORM SEWER REPAIR-WEST	11-32-15-54500	STORM SEWER MAINTENANCE	2,274.50
Total DOWN TO EARTH CONTRACTORS INC:					2,274.50
DUNN LUMBER & TRUE VALUE					
735461	09/04/2018	PITCH FORKS-SEAWEED CONT	40-54-10-53520	BEACH MAINTENANCE SUPPLIES	42.99
737001	09/19/2018	CONCRETE MIX-METER POLE	42-34-50-53400	OPERATING SUPPLIES-ENFORCEMEN	11.78
737750	09/26/2018	GRIT CLOTHS-SWEEPER	11-32-10-52500	ST DEPT EQUIPMENT REPAIRS	7.68
738002	09/28/2018	GLOVES	48-00-00-53400	CEM OPERATING SUPPLIES	20.97
738625	10/04/2018	PAINT,SUPPLIES-RESTROOMS	11-52-00-53500	BLDG MAINT SUPPLIES-PARKS	279.43
738724	10/04/2018	ELEC SUPPLIES-ELMERS PIER	40-52-10-53990	BUOY/STALL MISC. EXPENSES	43.94
739174	10/09/2018	ANTI-FREEZE-RESTROOM CLO	11-52-00-53500	BLDG MAINT SUPPLIES-PARKS	28.74
739231	10/10/2018	FOUNTAIN PARTS-DOG PARK	11-52-00-53520	GROUNDS MAINT SUPPLIES	12.73
739294	10/10/2018	RESTROOM PAINT-GLOSS	11-52-00-53500	BLDG MAINT SUPPLIES-PARKS	69.98
739294	10/10/2018	RESTROOM PAINT-ENAMEL RE	11-52-00-53500	BLDG MAINT SUPPLIES-PARKS	65.98-
Total DUNN LUMBER & TRUE VALUE:					452.26
EAN HOLDINGS LLC					
REFUND 10/8/	10/08/2018	DUPLICATE TICKET 520358	42-34-50-46340	PARKING STALL TICKETS	20.00
REFUND 10/8/	10/08/2018	DUPLICATE TICKET 520358-PE	42-34-50-46320	PARKING TICKET PENALTIES	20.00
Total EAN HOLDINGS LLC:					40.00
FIRST SUPPLY LLC					
1778731-00	10/08/2018	RESTROOM FAUCETS	11-52-01-53500	BLDG MAINT & REPAIR	504.44
Total FIRST SUPPLY LLC:					504.44
FLOWER, JIM					
MILEAGE-9/18	09/30/2018	241 MILES-C/E	11-24-00-53300	BLDG INSPECTOR TRAVEL-MILEAGE	131.35
Total FLOWER, JIM:					131.35
GAGE MARINE CORP					
157750	09/18/2018	BUOY #31 INSTALL	40-52-10-52640	BUOYS & BOAT STALLS-REPAIRS	55.00
157751	09/18/2018	GAS PIER REPAIR	40-52-10-52640	BUOYS & BOAT STALLS-REPAIRS	9,142.20

Invoice Number	Invoice Date	Description	GL Account and Title		Net Invoice Amount
Total GAGE MARINE CORP:					9,197.20
GENEVA AUTOMOTIVE LLC					
J001832	02/12/2018	REPLACE ACCELERATOR PED	48-00-00-53510	CEM VEHICLE MAINT/REPAIR	332.00
J002715	09/26/2018	REPLACE BATTERY	48-00-00-53510	CEM VEHICLE MAINT/REPAIR	242.00
Total GENEVA AUTOMOTIVE LLC:					574.00
GENEVA LAKE MUSEUM					
2018 PMT 2 O	10/01/2018	2018 PAYMENT 2 OF 2	11-51-10-57350	MUSEUM-OPERATIONS SUBSIDY	6,500.00
Total GENEVA LAKE MUSEUM:					6,500.00
GENEVA ONLINE INC					
1071202	10/01/2018	EMAIL SVC-OCT	11-12-00-52210	MUNICIPAL CT TELEPHONE	2.00
Total GENEVA ONLINE INC:					2.00
ITU ABSORB TECH INC					
7099640	10/05/2018	MATS	11-16-10-53600	CITY HALL MAINT SERVICE COSTS	79.16
Total ITU ABSORB TECH INC:					79.16
JERRY WILLKOMM INC					
245379	09/25/2018	1500 GALS GAS	11-32-10-53410	VEHICLE-FUEL & OIL	4,213.50
Total JERRY WILLKOMM INC:					4,213.50
JOHNS DISPOSAL SERVICE INC					
221993	10/05/2018	OCT SVC	11-36-00-52940	SOLID WASTE-RESIDENTIAL	27,802.77
221993	10/05/2018	OCT SVC	11-36-00-52970	SOLID WASTE-RECYCLING	11,386.80
Total JOHNS DISPOSAL SERVICE INC:					39,189.57
JUREWICZ, JUDY					
4606	10/02/2018	TRIMMER LINE	11-52-00-53400	PARKS OPERATING SUPPLIES	102.18
Total JUREWICZ, JUDY:					102.18
KAESTNER AUTO ELECTRIC CO					
320306	10/04/2018	LIGHTS-LOADER #35	11-32-10-53510	VEHICLE/EQUIPMENT MAINTENANCE	138.00
320306	10/04/2018	SAFETY GLASSES	11-32-10-53900	FIRST AID AND SAFETY SUPPLIES	58.06
Total KAESTNER AUTO ELECTRIC CO:					196.06
KAPUR & ASSOCIATES INC					
95258	09/17/2018	ENG-DHYANI	11-00-00-13910	A/R BILL OUTS	187.00
95267	09/17/2018	ENG 7/29-9/1	43-32-10-17010	2018/2019 STREET IMP PROGRAM	722.00
95268	09/17/2018	ENG-ROZOLIS	11-00-00-13910	A/R BILL OUTS	521.92
95327	09/20/2018	ENG-SUMMERHAVEN	11-00-00-13910	A/R BILL OUTS	55.50
95330	09/20/2018	ENG-WOLFF R/E	11-00-00-13910	A/R BILL OUTS	166.50
95352	09/21/2018	ENG-CHIEF WAUBONSEE	11-00-00-13910	A/R BILL OUTS	222.00
Total KAPUR & ASSOCIATES INC:					1,874.92

Invoice Number	Invoice Date	Description	GL Account and Title		Net Invoice Amount
LAKE GENEVA BID					
REFUND 10/8/	10/08/2018	SEC DEP-TABLES,TRASH,BAR	11-00-00-23530	SECURITY DEPOSITS	200.00
Total LAKE GENEVA BID:					200.00
LAKE GENEVA REGIONAL NEWS					
1270006	09/30/2018	LN-PIP 1111 EDWARDS BLVD	11-10-00-53150	PUBLICATION FEES REIMBURSABLE	44.64
1270239	09/16/2018	LN-COMP PLAN AMENDMENT N	11-10-00-53150	PUBLICATION FEES REIMBURSABLE	38.85
1271141	09/13/2018	LN-7/23/18 COUNCIL MINUTES	11-10-00-53140	OFFICIAL PUBLICATIONS & NOTICE	326.29
1271170	09/13/2018	LN-8/13/18 COUNCIL MINUTES	11-10-00-53140	OFFICIAL PUBLICATIONS & NOTICE	219.14
1271174	09/13/2018	LN-8/16/18 COUNCIL MINUTES	11-10-00-53140	OFFICIAL PUBLICATIONS & NOTICE	43.35
1271930	09/20/2018	LN-MOSQUITO SPRAYING	11-10-00-53140	OFFICIAL PUBLICATIONS & NOTICE	76.00
1272573	09/27/2018	LN-TYPE E NOTICE NOV 2018	11-14-30-53110	BALLOTS/OTHER ELECTION EXPENSE	18.64
1272573	09/27/2018	LN-TYPE E NOTICE NOV 2018	11-00-00-13910	A/R BILL OUTS	149.36
Total LAKE GENEVA REGIONAL NEWS:					916.27
LAKE GENEVA UTILITY					
1251 TOWNLI	10/02/2018	1251 TOWNLINE RD, BLDG #1	45-00-00-24520	WATER IMPACT FEES	10,140.00
1251 TOWNLI	10/02/2018	1251 TOWNLINE RD, BLDG #1	45-00-00-24530	SEWER IMPACT FEES	11,190.00
1251 TOWNLI	10/02/2018	1251 TOWNLINE RD, BLDG #2	45-00-00-24520	WATER IMPACT FEES	10,140.00
1251 TOWNLI	10/02/2018	1251 TOWNLINE RD, BLDG #2	45-00-00-24530	SEWER IMPACT FEES	11,190.00
Total LAKE GENEVA UTILITY:					42,660.00
LASER ELECTRIC SUPPLY					
1464724-00	09/20/2018	FLUORESCENT TUBES	40-55-20-53500	BLDG MAINT SUPPLIES-LOWER RIV	102.17
Total LASER ELECTRIC SUPPLY:					102.17
MARED MECHANICAL					
109880	09/27/2018	CONDENSER FAN MOTOR/BLA	11-16-10-52400	CITY HALL BUILDING REPAIRS	481.13
109880	09/27/2018	REFRIGERANT R22-MUSEUM	11-51-10-52400	MUSEUM-MAINTENANCE & REPAIRS	241.08
109942	09/27/2018	REPAIR EXHAUST FAN-RR	11-16-10-52400	CITY HALL BUILDING REPAIRS	238.00
Total MARED MECHANICAL:					960.21
MIDWEST ACTION CYCLE					
SD 10/8/18	10/08/2018	SEC DEP-PARK 10/8/18	11-00-00-23530	SECURITY DEPOSITS	100.00
Total MIDWEST ACTION CYCLE:					100.00
MONROE TRUCK EQUIPMENT					
5384218	10/02/2018	SPRING-TRK #23	11-32-12-52500	SNOW & ICE CONTROL-REPAIRS	46.71
Total MONROE TRUCK EQUIPMENT:					46.71
MUNICIPAL SERVICES LLC					
201880	09/17/2018	SEP SVCS	11-24-00-52190	CONTRACT BUILDING INSPECTOR	199.50
Total MUNICIPAL SERVICES LLC:					199.50
NAPA-ELKHORN					
132245	10/03/2018	FUEL FILTER-MOWER	11-52-00-52500	EQUIPMENT REPAIR SERVICES	7.30
Total NAPA-ELKHORN:					7.30

Invoice Number	Invoice Date	Description	GL Account and Title		Net Invoice Amount
OFFICE DEPOT					
209846971001	09/26/2018	PAPER	42-34-50-53100	OFFICE SUPPLIES	61.02
209846971001	09/26/2018	PAPER	11-24-00-53100	BLDG INSPECTOR OFFICE SUPPLIES	61.02
209846971001	09/26/2018	PAPER,CORR TAPE,BINDINGS	11-16-10-53100	CITY HALL OFFICE SUPPLIES	112.17
211091347001	09/28/2018	CALCULATOR-H/R	11-15-10-53100	ACCTG OFFICE SUPPLIES	68.99
211091347001	09/28/2018	STAPLES	11-15-10-53100	ACCTG OFFICE SUPPLIES	4.04
211091347001	09/28/2018	STAPLES	11-14-30-53100	CITY CLERK OFFICE SUPPLIES	4.05
Total OFFICE DEPOT:					311.29
OTTO JACOBS					
117086	09/30/2018	GRAVEL-LIBRARY PARK WEST	11-32-15-54500	STORM SEWER MAINTENANCE	949.50
Total OTTO JACOBS:					949.50
PATS SERVICES INC					
A-167481	09/27/2018	PORT A POTTY SVC-SEP	48-00-00-52260	CEM WATER/SEWER EXP	80.00
Total PATS SERVICES INC:					80.00
POMP'S TIRE SERVICE INC					
60158550	09/28/2018	TRACTOR TIRES	11-32-10-52500	ST DEPT EQUIPMENT REPAIRS	90.00
Total POMP'S TIRE SERVICE INC:					90.00
PULEO, JOHN					
REFUND 10/6/	10/08/2018	PULEO-SEC DEP 10/6/18	40-55-10-23530	SECURITY DEPOSITS-UPPER RIV	1,000.00
REFUND 10/6/	10/08/2018	PULEO-SETUP,SEC GRD-10/6/1	40-55-10-46740	UPPER RIVIERA REVENUE	346.75-
Total PULEO, JOHN:					653.25
QUILL CORPORATION					
1410428	09/24/2018	PAPER,FILES,TIME CLOCK	11-32-10-53400	OPERATING SUPPLIES-STREET DEPT	222.63
Total QUILL CORPORATION:					222.63
RHYME BUSINESS PRODUCTS					
23464889	10/01/2018	TASKALFA 3011I-OCT	11-24-00-53100	BLDG INSPECTOR OFFICE SUPPLIES	125.24
AR251373	09/28/2018	M3550IDN-OCT	11-12-00-53610	EQUIPMENT MAINT SERVICE COSTS	22.00
AR251374	09/28/2018	SHARP-SEP COLOR	11-16-10-55310	CH OFFICE EQUIPMENT CONTRACTS	112.00
AR251374	09/28/2018	SHARP-SEP B&W	11-16-10-55310	CH OFFICE EQUIPMENT CONTRACTS	22.63
Total RHYME BUSINESS PRODUCTS:					281.87
ROSS, SARAH					
REFUND 10/5/	10/06/2018	ROSS-SEC DEP 10/5/2018	40-55-10-23530	SECURITY DEPOSITS-UPPER RIV	1,000.00
REFUND 10/5/	10/06/2018	ROSS-SETUP,SEC GRD 10/5/18	40-55-10-46740	UPPER RIVIERA REVENUE	293.50-
Total ROSS, SARAH:					706.50
ROTE OIL COMPANY					
1827000417	09/27/2018	117 GALS CLEAR DIESEL	11-32-10-53410	VEHICLE-FUEL & OIL	340.35
1827100018	09/28/2018	252.2 GALS DYED DIESEL	11-32-10-53410	VEHICLE-FUEL & OIL	655.46
1827800405	10/05/2018	107.7 GALS CLEAR DIESEL	11-32-10-53410	VEHICLE-FUEL & OIL	324.07
1827800406	10/05/2018	129.8 GALS DYED DIESEL	11-32-10-53410	VEHICLE-FUEL & OIL	350.34

Invoice Number	Invoice Date	Description	GL Account and Title		Net Invoice Amount
Total ROTE OIL COMPANY:					1,670.22
SAWYER FALDUTO MANAGEMENT LLC					
REFUND 10/4/	10/05/2018	SAWYER-SEC DEP 10/4/18	40-55-10-23530	SECURITY DEPOSITS-UPPER RIV	1,000.00
REFUND 10/4/	10/05/2018	SAWYER-SETUP,SEC GRD 10/4	40-55-10-46740	UPPER RIVIERA REVENUE	194.75-
REFUND 10/4/	10/05/2018	SAWYER-LEASE 10/4/18	40-55-10-46740	UPPER RIVIERA REVENUE	400.00-
Total SAWYER FALDUTO MANAGEMENT LLC:					405.25
SEISSER, JENNIFER L					
REFUND 10/4/	10/04/2018	REF BOND- #CN80F3ST4R	11-12-00-45100	COURT PENALTIES & FINES	287.80
Total SEISSER, JENNIFER L:					287.80
SPRINGSTED INC					
18-190	10/01/2018	2018 CONTINUING DISCLOSUR	11-15-10-52120	ACCTG CONSULTANT FEES	1,700.00
Total SPRINGSTED INC:					1,700.00
TOM EARLE					
MILEAGE-9/18	09/25/2018	103 MILES-DPW MGT CLASS	11-32-10-53300	MILEAGE/TRAVEL	56.14
Total TOM EARLE:					56.14
TURNER, AMY					
REF SEC DEP	10/01/2018	TURNER-SEC DEP 9/29/18	40-55-10-23530	SECURITY DEPOSITS-UPPER RIV	1,000.00
REF SEC DEP	10/01/2018	TURNER-SETUP,SEC GRD 9/29/	40-55-10-46740	UPPER RIVIERA REVENUE	374.00-
Total TURNER, AMY:					626.00
VANDEWALLE & ASSOCIATES INC					
201808097	09/18/2018	PLANNING-THRU SEP 18	11-69-30-52120	OUTSIDE PROFESSIONAL PLANNING	3,880.40
201808097	09/18/2018	PLANNING-THRU SEP 18	11-00-00-13910	A/R BILL OUTS	3,852.98
Total VANDEWALLE & ASSOCIATES INC:					7,733.38
WE ENERGIES					
OCT 2018	10/03/2018	7891194618-CITY HALL GAS/HE	11-16-10-52240	CITY HALL GAS HEAT	288.77
OCT 2018	10/03/2018	7837744963-FIREHOUSE GAS/H	11-22-00-52240	FIREHOUSE GAS HEAT	42.23
OCT 2018	10/03/2018	0480524472-UPPER RIV GAS/H	40-55-10-52240	UPPER RIVIERA GAS HEAT	94.36
OCT 2018	10/03/2018	0847573906-HOST DRIVE WATE	11-22-00-52240	FIREHOUSE GAS HEAT	12.41
OCT 2018	10/03/2018	5288664956-MUSEUM GAS/HEA	11-51-10-52240	MUSEUM-GAS HEAT	24.19
OCT 2018	10/03/2018	8052439940-1055 CAREY ST GA	11-32-10-52240	ST DEPT BLDG GAS HEAT	10.89
OCT 2018	10/03/2018	8017524022-1065 CAREY ST GA	11-32-10-52240	ST DEPT BLDG GAS HEAT	28.43
OCT 2018	10/03/2018	6602046262-1070 CAREY ST GA	11-32-10-52240	ST DEPT BLDG GAS HEAT	29.61
OCT 2018	10/03/2018	7283171261-VETS PARK GAS/H	11-52-01-52240	VETS PARK GAS HEAT	9.57
OCT 2018	10/03/2018	1885876489-CEMETERY GAS/H	48-00-00-52240	CEM GAS HEAT EXP	13.71
OCT 2018	10/03/2018	3843358997-LIBRARY GAS/HEA	99-00-00-52220	LIBRARY UTILITIES	97.00
OCT 2018	10/03/2018	5604510433-LIBRARY-GAS/HEA	99-00-00-52220	LIBRARY UTILITIES	245.00
Total WE ENERGIES:					896.17
WI DEPT OF REVENUE					
64-246 2018	10/12/2018	2018 MFG ASSESSMENT	11-15-40-52130	MANUFACTURING ASSESSMENT	2,069.02

Invoice Number	Invoice Date	Description	GL Account and Title	Net Invoice Amount
Total WI DEPT OF REVENUE:				2,069.02
WISCONSIN ARBORIST ASSOCIATION				
10/8/18	10/08/2018	WAA FALL CONF-FOSTER/WAS	11-32-13-54100 TRAINING & SEMINARS	190.00
Total WISCONSIN ARBORIST ASSOCIATION:				190.00
Grand Totals:				133,992.86

Dated: _____

Mayor: _____

City Council: _____

_____

_____

_____

_____

_____

City Recorder: _____

Report Criteria:
Detail report.
Invoices with totals above $0.00 included.
Only unpaid invoices included.
Invoice.Batch = "181021","181022"
Invoice Detail.GL account (2 Characters) = {<>} "61"
Invoice Detail.GL account (2 Characters) = {<>} "62"