City of Lake Geneva, 626 Geneva St, Lake Geneva, WI 53147- 262.248.3673- www.cityoflakegeneva.com

CITY OF LAKE GENEVA RIVIERA RESTORATION AD HOC COMMITTEE
MONDAY, AUGUST 3, 2020- 4:00 PM
LAKE GENEVA CITY HALL, COUNCIL CHAMBERS

Members: Chair: Mayor Klein, Tom Earle- Director of Public Works, Dan Draper- City Attorney, David Nord- City Administrator, David Desimone – SHPO, Mary Jo Fesenmaier -Public Works Committee, Tim Dunn - Piers and Harbors Committee, Carroll Pearson – Citizen, Fred Gahl - Chair, Fundraising Committee, Grace Hanny - City of Lake Geneva Historic Preservation Commission, Grace Ecklund- Beautification Committee, Janet Ewing, and Events Manager - Stephanie Copsey

AGENDA

1. Meeting called to order by Mayor Klein
2. Roll Call
3. Approval of the Minutes of the July 20, 2020 meeting
4. Discussion on First Floor Use(s) and Recommendation to Council
5. Discussion/Presentation from MSI General
6. Discussion/Report from the Fundraising Committee
7. Next meeting date/time/location
8. Adjournment

This is a meeting of the Riviera Restoration Ad Hoc Committee.
No official Council action will be taken; however, a quorum of the Council may be present.

Riviera Building

Remaining Scope of Work - Interior Alterations and MEP

July 16, 2020

Below are the descriptions possible scope of work for your consideration for the remaining work to be completed at the Riviera Building. We are again proposing these as "Good – Better – Best" options.

Second Floor – Ballroom, Restrooms, Bar(s), Ceilings, Floor/Ramp

Description	Good Option	Better Option	Best Option
Replace Ballroom Ceiling	Repl w/ Drywall	Drywall w/ Plaster	Lath and Plaster
ADA Restroom Upgrades			
Walls and Doors	Leave Existing	ADA Upgrades	ADA Upgrades
Counters	Leave Existing	Solid Surface (SS)	SS w/ Undermnt Lavs
Partitions	Baked Enamel	Plastic Laminate (Plam)	Solid Plastic
Ceilings	Leave Existing	Repl w/ VWG	Repl w/ VWG & Alum.
Millwork			
Bar	New Tops/Refinish	New Bar – w/Plam	New Bar – w/Solid Surf.
Security Counter	New Tops/Refinish	New Bar – w/Plam	New Bar – w/Solid Surf.
Ballroom Floor	Leave Existing	Refinish Existing*	Remove/Replace Wd Flr
Ramp to Ballroom Floor	Do Not Include*	Ramp	Ramp
Miscellaneous			
Lighting and Wiring – RR	Existing	Lighting Only	Lighting and Wiring
Lighting – 2nd Floor (Rem Color)	Overhead	Overhead/Cove	Oh/Cove/Wall Wash
Ceiling Fans	Existing	Replace - Same Size	Replace- Larger
Draperies/Shades	Existing	Drapes/Shades	Mtrzd Drapes/Shades

First Floor Alterations

Description	Good Option	Better Option	Best Option
Ceilings			
Remove Plastic "Clouds"	Rem./Repaint Exposed	Rem./Drywall/Plstr	Rem./DW/Plstr/Coffers
Walls			
Incidental Repairs/Repaint	Minimal Repair/Repaint	Moderate Rep/Rep.	Move RR
Doors/Frames/Hardware			
Scope to be Determined			
Carpentry/Millwork			
Scope to be Determined			
Steel and Accessories			
Stairs from 2nd Floor Balc.	Repair and Repaint	Remove/Replace	Remove/Replace
Concrete			
Front Entry Stairs	Recaulk and Recoat	Remove/Replace	Rem./Repl. w/Heat
Flooring			
First Floor Flooring	Clean Existing	Grnd/Plsh to Terrazzo	Epoxy Terrazzo/Base
Restrooms			
Stay In Existing Locations	Repl. w/ Std Fixt.	Repl. w/ Upgrade	Replace with Touchless
Options Sim. To 2nd Floor			

MEP Alterations

Description	Good Option	Better Option	Best Option
Elevator	Modernization	Modernization	Remove/Replace
Plumbing			
Piping			
Below Slab Piping	Camera Survey Only	Replace All RR pipes	Replace All (incl. Cruise)
General RR Piping	Repl. Existing ***in same***	Repl. Existing ***in Same***	Restrooms ***Relocated***
Fixtures			
Water Closets (WC)	Repl w/ Std WC	Repl w/Cmfrt Ht./ADA	Cmfrt Ht./Sensored Flsh
Urinals	Repl. w/Std Urinal	Repl w/ADA	Repl. w/ADA/Sensored
Lavs (sinks/basins)	Repl. w/drop-in	Repl. w/Undermnt	Undermnt w/Sensored
Miscellaneous			
Icemaker	Replumb the Drain	Replumb the Drain	Replumb the Drain
Winterize Below 2nd Men's	Winterize	Winterize	Winterize
New Mop Sink in Meter Room	New Mop Sink	New Mop Sink	New Mop Sink
1st Floor Restrooms Winterized	Winterize	Winterize	Winterize
Add Smart Storage Tank	N/A	If Boiler …	If Boiler…
Site Plumbing			
Drain Repair	Repair Site Drain	Repair Site Drain	Repair Site Drain
New 6" Water Service	No Service if No Syst.	6" Service	6" Service
Fire Protection (If/As Required)			
System Itself	No System-Grndfthr	Install System	System w/ Upgrades
Fire Department Connect.	No System-Grndfthr	Install FDC	Install FDC

HVAC

Var. Refrig. Flow Heat Pump	VRF Heat Pump	VRF Heat Pump	VRF Heat Pump
HDPE Piping for Heat Reject.	HDPE Piping	HDPE Piping	HDPE Piping
Energy Recovery Ventilation	ERV and DCV	ERV and DCV	ERV and DCV
High Efficiency Boiler	Radiant Panels	Radiant Panels	Panels and Snow Melt
Wi-Fi Thermostats	Std Controls	Std Controls	Wi-Fi Thermostats
Capture Hood/Exhaust Dshwsh	N/A	N/A	Capture Hood/Exhaust

Electrical

General

Cleanup of Switchgear/Transf.	14 Point Cleanup	14 Point Cleanup	14 Point Cleanup
Egress Lighting Inter/Exter	Egress Lighting	Egress Lighting	Egress Lighting
Provide Area of Rescue	Area of Rescue	Area of Rescue	Area of Rescue

Equipment Wiring

Elevator	Minimal	For Modernization	For Replacement
HVAC Equipment	Per Equipment	Per Equipment	Per Equipment
Thermostats/Controls	Standard	Standard	Wi-Fi Thermostats

Miscellaneous

Exterior Lighting	NIC – Beautification	NIC – Beautification	NIC – Beautification
De-Icing Tape – Gutters		De-Icing Tape Gutters	De-Icing Tape Gutters
Exterior GFI's Winterfest	GFI's Winterfest	GFI's Winterfest	GFI's Winterfest

Low Voltage

Fire Alarm System Upgrades	System Upgrades	System Upgrades	System Upgrades
Security System/Cameras	Security System/Cam.	Security Syst./Cam.	Security Syst./Cam.
Cable/Wi-Fi/Audio Visual	Cable/Wi-Fi/AV	Cable/Wi-Fi/AV	Cable/Wi-Fi/AV
Voice/Data (if not above)	Voice/Data (above?)	Voice/Data (above?)	Voice/Data (above?)

Riviera Renovations - Roofing Only Preliminary Budget Options - Good - Better - Best - Job #4453

Cost Code	Description		Good Options	Better Options	Best Options	Selected Option
	Hypothetically February - April, 2019					
100	Project Requirements (Primarily for 3 Months)	A	$0	$0	$0	$0
101	~~Survey/topo - Historic Preservation Survey - Part of Architecture~~	A	$0	$0	$0	$0
102	~~Stake Building~~	A	$0	$0	$0	$0
103	~~Soil Test~~	A	$0	$0	$0	$0
104	~~Stake Site~~	A	$0	$0	$0	$0
105	~~Stake Curbs~~	A	$0	$0	$0	$0
106	Supervision (good 50%; better 75%; best 100%**) $85 per hour**	C	$22,100	$33,150	$44,200	$0
107	~~Grading~~	A	$0	$0	$0	$0
108	~~Special Assessment - Exclude~~	A	$0	$0	$0	$0
109	~~Utility Protect/Relocate - Allowance~~	A	$0	$0	$0	$0
110	State Permit - Exclude	C	$0	$0	$0	$0
110-01	State Permit for Historical Review- Exclude - assuming this will be with shell	C	$0	$0	$0	$0
111	Local Permit ($10/$1,000 val)	C	$6,000	$6,750	$8,800	$0
112	~~Construction Elect. - Assume that Owner will pay monthly energy bills~~	C	$0	$0	$0	$0
113	~~Temp. Heat - Allowance~~	C	$0	$0	$0	$0
114	Winter Conditions - Allowance for misc.	A	$2,000	$2,000	$2,000	$0
115	~~Rendering~~		$0	$0	$0	$0
116	~~Temporary Generator - Exclude~~		$0	$0	$0	$0
117	Job Trailer - (Allowance of $450/month + $450 transport); Or Room Rental Fee		$1,800	$1,800	$1,800	$0
118	Dumpsters - (Roof Allowance of 6 Exchanges)	C	$3,300	$3,300	$3,300	$0
119	~~Concrete Testing - (4 sets)~~	C	$0	$0	$0	$0
120	~~Dry Air System - Exclude - See Temp Heat~~	C	$0	$0	$0	$0
121	General Cleaning (1 x per month site clean)	C	$3,600	$3,600	$3,600	$0
122	Final Cleaning (site clean + Ball Room)	C	$6,000	$6,000	$6,000	$0
124	~~Dust Walls - Allowance~~	C	$0	$0	$0	$0
125	Temp Fence - (Allowance for base of scaffold or for closing access)	C	$1,500	$1,500	$1,500	$0
126	Temp Storage Trailers - Exclude	C	$0	$0	$0	$0
127	Temp Railings (Exterior would be part of scaffolding)	C	$0	$0	$0	$0
128	~~Temp Roads~~	C	$0	$0	$0	$0
129	Temp. Toilet (3 mos + move)	C	$500	$500	$500	$0
130	~~Knox Box - Allowance~~	C	$0	$0	$0	$0
133	Reproduction (5 shts x 12 sets + Specs)	C	$500	$500	$500	$0
134	~~Electric/Gas/Data Fees - Exclude~~	A	$0	$0	$0	$0
135	UPS - Allowance	C	$150	$150	$150	$0
136	~~Impact Fees - Exclude~~	A	$0	$0	$0	$0
137	~~Barriers/Enclosures - (Encl. Scaffold)~~	C	$0	$0	$0	$0
138	Street Cleaning/Snow Removal/Snow Clearing from Roof	A	$6,000	$6,000	$6,000	$0
139	~~Shoring - (See Subcontractor Below)~~	A	$0	$0	$0	$0
142	~~Poor Soils Allowance - Exclude~~	A	$0	$0	$0	$0
143	~~Temp Walk Off Mats~~	A	$0	$0	$0	$0
144	Finishes Protection Allowance - Of Ball Room	A	$2,000	$2,000	$2,000	$0
146	As-Built CD's	C	$500	$500	$500	$0
155	Job Sign	C	$750	$750	$750	$0
156	Temp Signage	C	$375	$375	$375	$0
162	~~Sewer & Water fees - Exclude~~	A	$0	$0	$0	$0
170	~~Utility relocation - Exclude~~	A	$0	$0	$0	$0
178	~~Civil Engineering - Exclude~~		$0	$0	$0	$0
179	~~Interior Design - (Exterior by Legacy)~~		$0	$0	$0	$0
190	Project Manager (good 50%; better 75%; best 100%) (PM not Proj. Direct.)	C	$6,500	$9,750	$13,000	$0
185	Insurance	1%	$6,636	$7,536	$9,750	**$0**
187	~~Structural Steel Final Design - Exclude~~	0%	$0	$0	$0	$0
	Project Requirements		**$70,211**	**$86,161**	**$104,725**	**$0**
139	**Scaffolding/Shoring - (Exclude if no Guttering)**					
600	**Carpentry**					
	Allow for Replacement of Underlayment (13,200sf x 10% = 1,320) - Conting.		$0	$0	$0	$0
			$0	$0	$0	$0
750	**Roofing - (Clay Tile/Conc. Tile)**					
	Metal Roof Allowance - If Acceptable - No Approved Sample as of Yet		***$600,000***	$0	$0	$0
			$0	$0	$0	$0
	Interstate Roofing - Concrete Tile		$0	***$675,000***	$0	$0
			$0	$0	$0	$0
	Renaisance - (if selection from Std Options)		$0	$0	***$880,000***	$0
			$0	$0	$0	$0
	Total Cost		**$670,211**	**$761,161**	**$984,725**	**$0**
169	Arch/Engineering	6.00%	$40,213	$45,670	$59,083	$0
198	Contingency (per KHR Recommendation)	10.00%	$67,021	$76,116	$98,472	$0
	Total Cost		**$777,444**	**$882,947**	**$1,142,281**	**$0**
	Contractor's Fee	8.00%	$62,196	$70,636	$91,382	$0
	Project Total with Fees and Contingency		**$839,640**	**$953,583**	**$1,233,663**	**$0**
	Performance Bond (50% of Cost of Bond)		$3,320	$3,679	$4,561	$0
	Project Total with Fees, Contingency and 50% of Bond		**$842,960**	**$957,262**	**$1,238,224**	**$0**

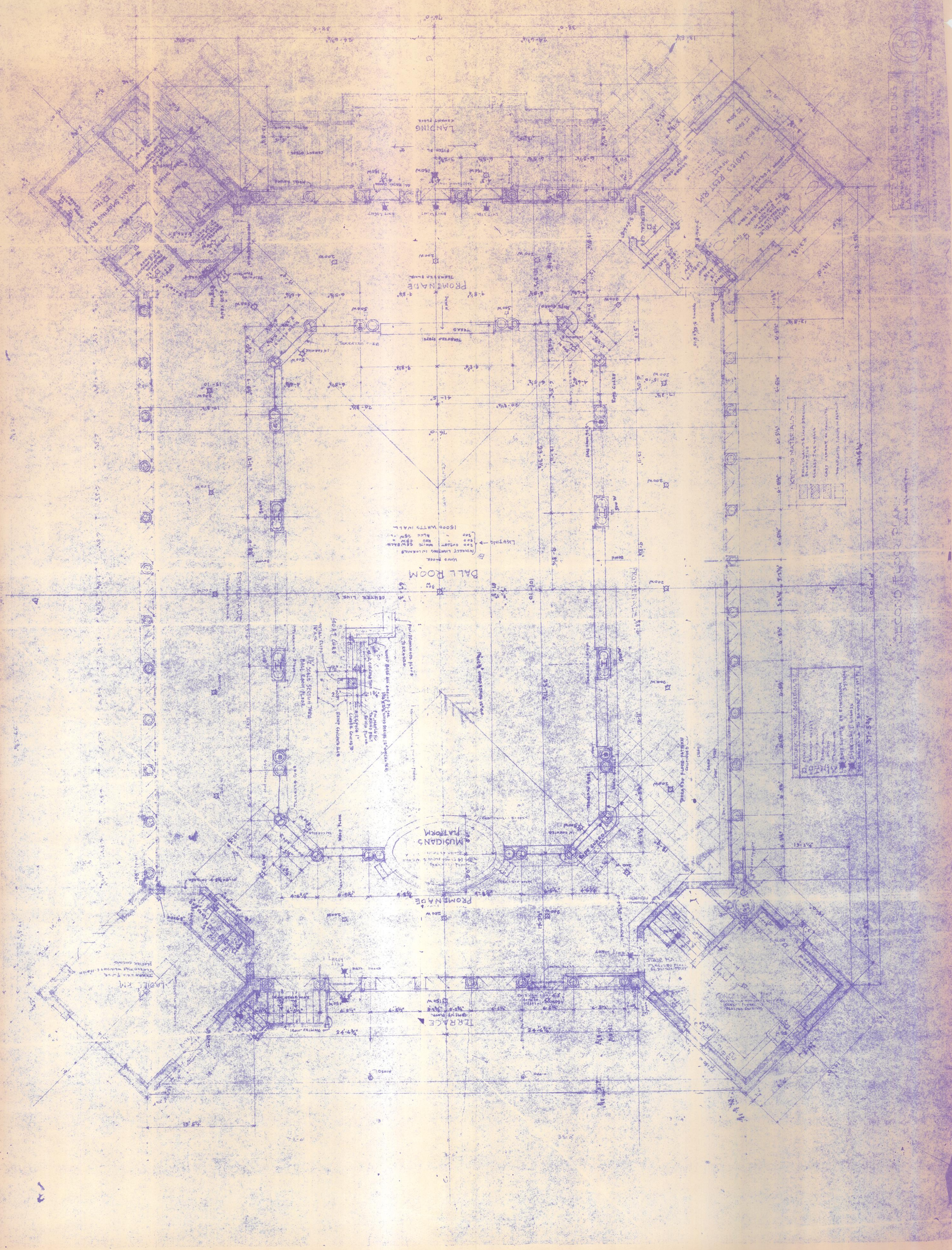
SECOND FLOOR PLAN
BALL ROOM
MUSICIAN'S PLATFORM
PROMENADE
TERRACE
LANDING
LADIES REST RM
MEN'S SMOKING RM
KEY TO MATERIALS

Riviera Renovations - Shell Only (No Roof) Preliminary Budget Options - Good - Better - Best - Job #4453

Cost Code	Description		Good Options	Better Options	Best Options	Selected Option
	Hypothetically October - December, 2019					
100	Project Requirements (Primarily for 3 Mos)	A	$0	$0	$0	$0
101	~~Survey/topo - Historic Preservation Survey - Part of Architecture~~	A	$0	$0	$0	$0
102	~~Stake Building~~	A	$0	$0	$0	$0
103	~~Soil Test~~	A	$0	$0	$0	$0
104	~~Stake Site~~	A	$0	$0	$0	$0
105	~~Stake Curbs~~	A	$0	$0	$0	$0
106	Supervision (good 50%; better 75%; best 100%**) $85 per hour**	C	$22,100	$33,150	$44,200	$0
107	~~Grading~~	A	$0	$0	$0	$0
108	~~Special Assessment - Exclude~~	A	$0	$0	$0	$0
109	Utility Protect/Relocate - Allowance	A	$7,500	$7,500	$7,500	$0
110	State Permit (based on 15,346 sf)	C	$1,250	$1,250	$1,250	$0
110-01	State Permit for Historical Review	C	$15,000	$15,000	$15,000	$0
111	Local Permit (.30x15346 or $10/$1,000 val)	C	$40,000	$40,000	$40,000	$0
112	~~Construction Elect. - Assume that Owner will pay monthly energy bills~~	C	$0	$0	$0	$0
113	Temp. Heat - Allowance - If Needed for Inside Enclosed Scaffolding	C	$15,000	$15,000	$15,000	$0
114	Winter Conditions - Allowance for misc.	A	$2,000	$2,000	$2,000	$0
115	~~Rendering~~		$0	$0	$0	$0
116	~~Temporary Generator - Exclude~~		$0	$0	$0	$0
117	Job Trailer - (Allowance of $450/month + $450 transport); Or Room Rental Fee		$1,800	$1,800	$1,800	$0
118	Dumpsters - (Allow. Of 3; Roof Allow of 6)	C	$4,950	$4,950	$4,950	$0
119	Concrete Testing - (4 sets)	C	$1,200	$1,200	$1,200	$0
120	~~Dry Air System - Exclude - See Temp Heat~~	C	$0	$0	$0	$0
121	General Cleaning - Includes weekly portering for pre-event cleaning	C	$10,500	$10,500	$10,500	$0
122	Final Cleaning - Of 1st and 2nd Floor	C	$8,500	$8,500	$8,500	$0
124	Dust Walls - Allowance	C	$3,600	$3,600	$3,600	$0
125	Temp Fence - (Allow. For Base of Scaffold)	C	$5,500	$5,500	$5,500	$0
126	Temp Storage Trailers	C	$2,000	$2,000	$2,000	$0
127	Temp Railings (Exter = Scaff.; Inter - Elev.)	C	$2,500	$2,500	$2,500	$0
128	~~Temp Roads~~	C	$0	$0	$0	$0
129	Temp. Toilet (3 mos + move)	C	$500	$500	$500	$0
130	Knox Box - Allowance	C	$750	$750	$750	$0
133	Reproduction (40 shts x 25 sets)	C	$1,000	$1,000	$1,000	$0
134	~~Electric/Gas/Data Fees - Exclude~~	A	$0	$0	$0	$0
135	UPS - Allowance	C	$500	$500	$500	$0
136	~~Impact Fees - Exclude~~	A	$0	$0	$0	$0
137	Barriers/Enclosures - (Encl. Scaffold)	C	$3,300	$3,300	$3,300	$0
138	Street Cleaning/Snow Removal	A	$6,000	$6,000	$6,000	$0
139	~~Shoring - (See Subcontractor Below)~~	A	$0	$0	$0	$0
142	~~Poor Soils Allowance - Exclude~~	A	$0	$0	$0	$0
143	Temp Walk Off Mats	A	$1,000	$1,000	$1,000	$0
144	Finishes Protection Allowance	A	$4,000	$4,000	$4,000	$0
146	As-Built CD's	C	$1,500	$1,500	$1,500	$0
155	Job Sign	C	$1,500	$1,500	$1,500	$0
156	Temp Signage	C	$750	$750	$750	$0
162	~~Sewer & Water fees - Exclude~~	A	$0	$0	$0	$0
170	~~Utility relocation - Exclude~~	A	$0	$0	$0	$0
178	~~Civil Engineering - Exclude~~		$0	$0	$0	$0
179	~~Interior Design - (Exterior by Legacy)~~		$0	$0	$0	$0
190	Project Manager (good 50%; better 75%; best 100%) (PM not Proj. Direct.)	C	$6,500	$9,750	$13,000	$0
185	Insurance	1%	**$9,728**	**$15,155**	**$17,577**	**$0**
187	Structural Steel Final Design - For Lintels/Conc. Repairs/Stairs/Misc.		$7,500	$7,500	$7,500	$0
	Project Requirements		**$187,928**	**$207,655**	**$224,377**	**$0**
139	**Scaffolding/Shoring - (Exclude if no Guttering)**					
200	**Sitework - (or Demo)**					
243	**Demolition - (Stair/Selective)**					
	Monument Stairs to be Repaired vs. Replaced - See Concrete		$0	$0	$0	$0
	Monument Stair Removal		$0	***$35,700***	$0	$0
	Monument Stair Removal		$0	$0	***$35,700***	$0
300	**Concrete**					
	North Entry Stairs - Repair vs. Replace		***$25,000***	$0	$0	$0
	North Entry Stairs - Replace		$0	***$74,550***	$0	$0
	North Entry Stairs - Replace		$0	$0	***$74,550***	$0
	South Entry Balcony deck/metal Stairs - Needs to be Completed		***$22,874***	***$22,874***	***$22,874***	$0
			$0	$0	$0	$0
			$0	$0	$0	$0
300/400	**Concrete/Masonry (See Separate)**					
300/400	**Concrete Cutting/Coring (by trade)**					
340	**Precast - Architectural Sills/Band**					
~~**357**~~	~~**Curb & Gutter**~~					
400	**Masonry - Tuckpointing**					
	Tuckpointing - (Including Scaffolding)			$0	$0	$0
			$0	$0	$0	$0
	Repair South Balc. Wall; Repoint and Clean; 25% Sills Caps; Downspouts		***$514,100***	$0	$0	$0
			$0	$0	$0	$0
	Above Plus: Reconstruct South Balc.; 50% Sills; Partial Repair Banding		$0	***$731,900***	$0	$0
			$0	$0	$0	$0
	Above Plus: Expanding Banding Repair Allowance; 100% Sills; Staining		$0	$0	***$819,250***	$0
500	**Structural Steel - Fabrications**					
	North Entry Stairs		***$49,613***	***$49,613***	***$49,613***	$0
			$0	***$0***	***$0***	$0
	New railings at terrace walls		***$39,000***	***$39,000***	***$39,000***	$0
			$0	***$0***	***$0***	$0
	South Balcony Railings		***$13,700***	***$13,700***	***$13,700***	$0
			$0	$0	$0	$0

510	**Steel Erection - (or by Trade)**					
600	**Carpentry**					
	Allow for Replacement of Underlayment (13,200sf x 10% = 1,320) - Conting.		$0	$0	$0	$0
			$0	$0	$0	$0
700	**Insulation - Upgrades**					
711	**Waterproofing -**					
750	**Roofing - (Clay Tile/Conc. Tile)**					
790	**Caulking - (or by trade)**					
800	**Glass & Glazing**					
	Heritage Glass- Allowance for Repairs/Seal/Glass		***$100,000***	$0	$0	$0
			$0	$0	$0	$0
	Replacement with Storefront (similar)		$0	***$275,750***	$0	$0
			$0	$0	$0	$0
	Replacement with Winco Simulated Steel Sash Window		$0	$0	***$375,000***	$0
			$0	$0	$0	$0
806	**Automatic Entrances**					
810	**HM/Hard./Wd Drs - Custom Doors**					
836	**Specialty Doors/Counter Shutters**					
900	**Painting**					
	Allowance for Lintels, Miscellaneous Metals, Etc.		***$15,750***	***$15,750***	***$15,750***	$0
			$0	$0	$0	$0
1420	**Elevator & Convey Systems**					
	Otis Elevator - Leave as Existing		***$0***	$0	$0	$0
	Modernization		$0	***$71,663***	$0	$0
	Replacement of Elevator w/ Roomless		$0	$0	***$85,000***	$0
	Removal of Existing Elevator		$0	$0	***$28,000***	$0
			$0	$0	$0	
	Total Cost		**$990,015**	**$1,538,155**	**$1,782,814**	**$0**
169	Arch/Engineering	6.00%	$59,401	$92,289	$106,969	$0
198	Contingency (per KHR Recommendation)	10.00%	$99,001	$153,816	$178,281	$0
	Total Cost		**$1,148,417**	**$1,784,260**	**$2,068,065**	**$0**
	Contractor's Fee	8.00%	$91,873	$142,741	$165,445	$0
	Project Total with Fees and Contingency		**$1,240,291**	**$1,927,001**	**$2,233,510**	**$0**
	Performance Bond (50% of Cost of Bond)		$4,582	$6,745	$7,711	
	Project Total with Fees, Contingency and 50% of Bond		**$1,244,873**	**$1,933,746**	**$2,241,221**	**$0**

RIVIERA AD HOC COMMITEE MINUTES
MONDAY, July 20, 2020 – 1:30 PM
Riviera Ballroom, 812 Wrigley Drive

Meeting was called to order by Mayor Klein at 1:32 p.m.

Mayor Klein asked, without objection, to again allow Alderman Fesenmaier to record minutes.

Roll Call
Present: Mayor Klein, Grace Hanny, Alderman Tim Dunn, Alderman Mary Jo Fesenmaier, Caroll Pearson, Fred Gahl, Janet Ewing
Absent: Dave Desimone, Committee Secretary; Grace Ecklund, Stephanie Copsey, Events Manager.
Quorum present.

Others in attendance: Tom Earle, Public Works Director; Alderman Flower (via Zoom), Richard Malmin, Lisa Manard Otto and Jen Lepkowski, Geneva Shore Report news; and MSI representatives Adam Wolfe, Jay Craig, Dave Luterbach; Kent Martzke, Geneva Boat Line

Approval of minutes from July 13, 2020
Sam Borghraef's name was omitted from the attendance section of the minutes.
Motion by Hanny, second by Pearson, to approve the July 13, 2020, with the staff name correction. Unanimoulsy carried.

Discussion on First Floor Use(s) and Recommendations to Council
Mayor Klein read comments emailed from Grace Eckland that the second floor ballroom exudes ambiance. In order to maximize revenue, increased lighting and cleanliness need to be priority for the first floor.
Grace Hanny emphasized that as a member of the Historic Preservation Committee, the City needs to maintain the building's historic status. She commented that the first floor of the Riviera does not portrait the grand image of Lake Geneva. She believes that first floor corridor needs to be opened up (within the parameters of the SHPO April 2020 letter), brightened, and generally cleaned. Mrs. Hanny suggested a nautical museum for the first floor that would attract visitors. She asked about the first floor business leases included in the packet.
Caroll Pearson agreed with the previous comments about drawing more people into the building with different choices such as a Native American museum. Bathrooms need desperate updating.
Alderman Dunn emphasized that the outside of the building is beautiful. He insists that lengthening the first floor windows will detract from the upper columns that were designed in an Italianate or Tuscan style. He reiterated that extending the size of the windows at the bottom will draw one's eyes away from the beauty of the top floor. Dunn was also concerned about removing and or renovating the size of the columns inside the first floor. He believes we can't tear out the shops and expect it to look like the top floor ballroom. He insisted that the first floor needs to be brought up to code. Alderman Dunn pointed out that a restaurant is an iffy proposition – they come and go all the time. Once we finish these renovations and updates, who will pay for the continued maintenance to ensure it does not fall into such severe disrepair again?
Janet Ewing, director of the Geneva Lakes Museum, pointed out that changing over to LED lighting could make a huge difference as they have seen at the museum.

Alderman Fesenmaier commented that there should absolutely not be one huge restaurant as the first floor. She thinks we need to maximize the profit from both floors.
Fred Gahl suggested it is like a Rubik's Cube. It may be that we have to be willing to lose money on the immediate structure at first. The task is to find resources to use on a regular basis. We should talk to the shopkeepers downstairs. How dysfunctional is it on a day-to-day basis?
Mayor Klein reminded us of the SHPO letter from April 2020 and that historic preservation is extremely important to the majority of the community. We need to work within the SHPO dropped parameters by not elongating the windows nor removing the inside corridor walls. Removing the ceiling might be an option to pursue. You can gauge the original height of the hall at the south end or the east bathrooms.

Other discussion: making the first floor year round rather than seasonal; reducing the number of shops or the ability to remove "temporary" walls between shops to combine for bigger/smaller spaces based on the need.
In 2018 the Tourism Commission hired Stephanie Copsey as events coordinator as the ballroom rental was not consistently booked from lack of marketing expertise from the past Harbormaster and due to renovation predicted schedules.
Consensus of the Committee was that historic registry status is paramount.

Public Works Direction, Tom Earle, referred to a list that detailed layout options at the June 5, 2019, Piers and Harbor meeting. This document will be emailed to the current Riviera Ad Hoc Committee members and the City Council.

Motion by Hanny, second by Ald. Dunn, to recommend to City Council to maintain the Historic Preservation Status of the Riviera Building and to explore different design options for the first floor. Carried.

Motion by Hanny, second by Pearson, that this committee recommends to the City Council that we move ahead with MSI proposals including the entire scope of the project for Phase 2 first and second floors. There was a document in the packet from MSI listing good, better, best options for pieces of the renovations still needed. Carried.

Discussion on recommendations to Council to procure bids for Ballroom:
No action – will be included in the MSI scope of work.

Discussion and recommendation to Council to procure bids for exterior and interior security cameras, exterior door repairs, and sandblasting/sealing a stone sills.
No action – will be included in the MSI scope of work.

Report from the Fundraising Sub-committee
No report.

Next meeting date – Monday, August 3, at 4:00 p.m. at City Hall

Motion by Hanny, second by Pearson, to adjourn at 3:28 p.m. Carried.

Respectfully submitted,
Alderman Fesenmaier

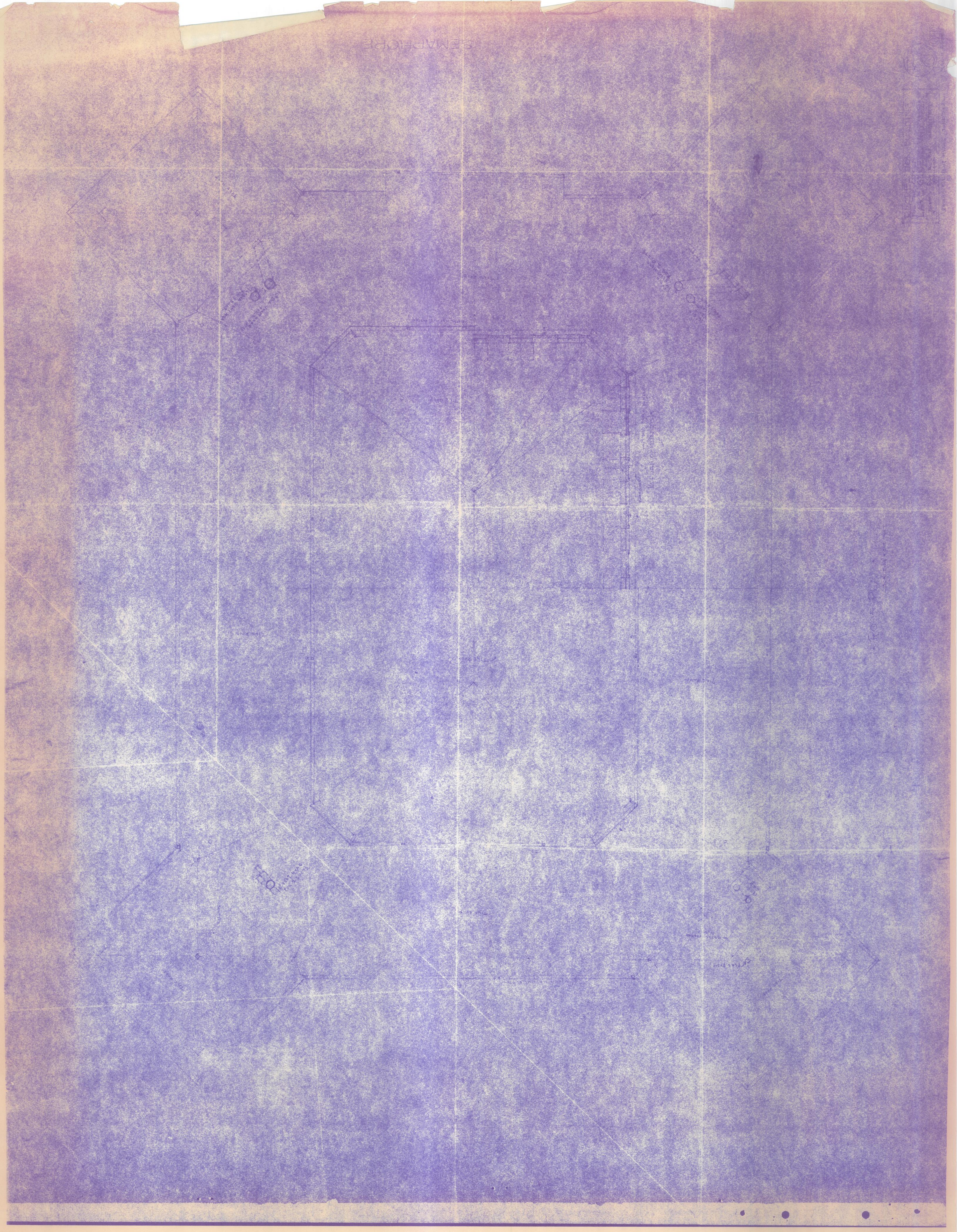

Riviera Renovations - Roof and Shell Preliminary Budget Options - Good - Better - Best - Job #4453

Cost Code	Description		Good Options	Better Options	Best Options	Selected Option
	Hypothetically October - December, 2019					
100	Project Requirements (Primarily for 3 Mos)	A	$0	$0	$0	$0
101	~~Survey/topo - Historic Preservation Survey - Part of Architecture~~	A	$0	$0	$0	$0
102	~~Stake Building~~	A	$0	$0	$0	$0
103	~~Soil Test~~	A	$0	$0	$0	$0
104	~~Stake Site~~	A	$0	$0	$0	$0
105	~~Stake Curbs~~	A	$0	$0	$0	$0
106	Supervision (good 50%; better 75%; best 100%**) $85 per hour**	C	$22,100	$33,150	$44,200	$0
107	~~Grading~~	A	$0	$0	$0	$0
108	~~Special Assessment - Exclude~~	A	$0	$0	$0	$0
109	~~Utility Protect/Relocate - Allowance~~	A	$7,500	$7,500	$7,500	$0
110	State Permit (based on 15,346 sf)	C	$1,250	$1,250	$1,250	$0
110-01	State Permit for Historical Review	C	$15,000	$15,000	$15,000	
111	Local Permit (.30x15346 or $10/$1,000 val)	C	$40,000	$40,000	$40,000	$0
112	~~Construction Elect. - Assume that Owner will pay monthly energy bills~~	C	$7,000	$7,000	$7,000	$0
113	Temp. Heat - Allowance	C	$15,000	$15,000	$15,000	$0
114	Winter Conditions - Allowance	A	$2,000	$2,000	$2,000	$0
115	~~Rendering~~		$0	$0	$0	$0
116	~~Temporary Generator - Exclude~~		$0	$0	$0	$0
117	Job Trailer - (Allowance of $450/month + $450 transport); Or Room Rental Fee		$1,800	$1,800	$1,800	$0
118	Dumpsters - (Allow. Of 3; Roof Allow of 6)	C	$3,900	$3,900	$3,900	$0
119	Concrete Testing - (4 sets)	C	$1,000	$1,000	$1,000	$0
120	~~Dry Air System - Exclude - See Temp Heat~~	C	$0	$0	$0	$0
121	General Cleaning	C	$10,500	$10,500	$10,500	$0
122	Final Cleaning	C	$8,500	$8,500	$8,500	$0
124	Dust Walls - Allowance	C	$3,600	$3,600	$3,600	$0
125	Temp Fence - (Allow. For Base of Scaffold)	C	$5,500	$5,500	$5,500	$0
126	Temp Storage Trailers	C	$2,000	$2,000	$2,000	$0
127	Temp Railings (Exter = Scaff.; Inter - Elev.)	C	$1,500	$1,500	$1,500	$0
128	~~Temp Roads~~	C	$0	$0	$0	$0
129	Temp. Toilet (3 mos + move)	C	$500	$500	$500	$0
130	Knox Box - Allowance	C	$750	$750	$750	$0
133	Reproduction (40 shts x 25 sets)	C	$1,000	$1,000	$1,000	$0
134	~~Electric/Gas/Data Fees - Exclude~~	A	$0	$0	$0	$0
135	UPS - Allowance	C	$500	$500	$500	$0
136	~~Impact Fees - Exclude~~	A	$0	$0	$0	$0
137	Barriers/Enclosures - (Encl. Scaffold)	C	$3,300	$3,300	$3,300	$0
138	Street Cleaning/Snow Removal	A	$6,000	$6,000	$6,000	$0
139	~~Shoring - (See Subcontractor Below)~~	A	$0	$0	$0	$0
142	~~Poor Soils Allowance - Exclude~~	A	$0	$0	$0	$0
143	Temp Walk Off Mats	A	$1,000	$1,000	$1,000	$0
144	Finishes Protection Allowance	A	$4,000	$4,000	$4,000	$0
146	As-Built CD's	C	$1,500	$1,500	$1,500	$0
155	Job Sign	C	$1,500	$1,500	$1,500	$0
156	Temp Signage	C	$750	$750	$750	$0
162	~~Sewer & Water fees - Exclude~~	A	$0	$0	$0	$0
170	~~Utility relocation - Exclude~~	A	$0	$0	$0	$0
178	~~Civil Engineering - Exclude~~		$0	$0	$0	$0
179	~~Interior Design - (Exterior by Legacy)~~		$0	$0	$0	$0
190	Project Management (good 50%; better 75%; best 100%) (PM not Proj. Direct.)	C	$6,500	$9,750	$13,000	$0
185	Insurance	1%	**$15,610**	**$22,007**	**$26,480**	**$0**
187	Structural Steel Final Design	0%	$7,500	$7,500	$7,500	$0
	Project Requirements		**$198,560**	**$219,257**	**$238,030**	**$0**
139	**Scaffolding/Shoring - (Exclude if no Guttering)**					
200	**Sitework - (or Demo)**					
243	**Demolition - (Stair/Selective)**					
	Monument Stairs to be Repaired vs. Replaced - See Concrete		$0	$0	$0	$0
	Monument Stair Removal		$0	***$35,700***	$0	$0
	Monument Stair Removal		$0	$0	***$35,700***	$0
300	**Concrete**					
	North Entry Stairs - Repair vs. Replace		***$25,000***	$0	$0	$0
	North Entry Stairs - Replace		$0	***$74,550***	$0	$0
	North Entry Stairs - Replace		$0	$0	***$74,550***	$0
	South Entry Balcony deck/metal Stairs - Needs to be Completed		***$22,874***	***$22,874***	***$22,874***	$0
			$0	$0	$0	$0
300/400	**Concrete/Masonry (See Separate)**					
300/400	**Concrete Cutting/Coring (by trade)**					
340	**Precast - Architectural Sills/Band**					
~~**357**~~	~~**Curb & Gutter**~~					
400	**Masonry - Tuckpointing**					
	Tuckpointing - (Including Scaffolding)			$0	$0	$0
			$0	$0	$0	$0
	Repair South Balc. Wall; Repoint and Clean; 25% Sills Caps; Downspouts		***$514,100***	$0	$0	$0
			$0	$0	$0	$0
	Above Plus: Reconstruct South Balc.; 50% Sills; Partial Repair Banding		$0	***$731,900***	$0	$0
			$0	$0	$0	$0
	Above Plus: Expanding Banding Repair Allowance; 100% Sills; Staining		$0	$0	***$819,250***	$0
500	**Structural Steel - Fabrications**					
	North Entry Stairs		***$49,613***	***$49,613***	***$49,613***	$0
			$0	***$0***	***$0***	$0
	New railings at terrace walls		***$39,000***	***$39,000***	***$39,000***	$0
			$0	***$0***	***$0***	$0
	South Balcony Railings		***$19,163***	***$19,163***	***$19,163***	$0
			$0	$0	$0	$0

510	**Steel Erection - (or by Trade)**					
600	**Carpentry**					
	Allow for Replacement of Underlayment (13,200sf x 10% = 1,320) - Conting.		$0	$0	$0	$0
			$0	$0	$0	$0
700	**Insulation - Upgrades**					
711	**Waterproofing -**					
750	**Roofing - (Clay Tile/Conc. Tile)**					
	Metal Roof Allowance - If Acceptable		***$600,000***	$0	$0	$0
			$0	$0	$0	$0
	Interstate Roofing - Concrete Tile		$0	***$675,000***	$0	$0
			$0	$0	$0	$0
	Renaisance - (if selection from Std Options)		$0	$0	***$880,000***	$0
			$0	$0	$0	$0
790	**Caulking - (or by trade)**					
800	**Glass & Glazing**					
	Heritage Glass- Allowance for Repairs/Seal		***$100,000***	$0	$0	$0
			$0	$0	$0	$0
	Replacement with Storefront (similar)		$0	***$275,750***	$0	$0
			$0	$0	$0	$0
	Replacement with Winco Simulated Steel Sash Window		$0	$0	***$375,000***	$0
			$0	$0	$0	$0
			$0	$0	$0	$0
806	**Automatic Entrances**					
810	**HM/Hard./Wd Drs - Custom Doors**					
836	**Specialty Doors/Counter Shutters**					
900	**Painting**					
	Allowance for Lintels, Miscellaneous Metals, Etc.		$15,750	$15,750	$15,750	$0
			$0	$0	$0	$0
1420	**Elevator & Convey Systems**					
	Otis Elevator - Leave as Existing		***$0***	$0	$0	$0
	Modernization		$0	***$71,663***	$0	$0
	Replacement of Elevator w/ Roomless		$0	$0	***$85,000***	$0
	Removal of Existing Elevator		$0	$0	***$28,000***	$0
			$0	$0	$0	
	Total Cost		**$1,584,060**	**$2,230,220**	**$2,681,930**	**$0**
169	Arch/Engineering	6.00%	$95,044	$133,813	$160,916	$0
198	Contingency (per KHR Recommendation)	10.00%	$158,406	$223,022	$268,193	$0
	Total Cost		**$1,837,509**	**$2,587,055**	**$3,111,038**	**$0**
	Contractor's Fee	8.00%	$147,001	$206,964	$248,883	$0
	Project Total with Fees and Contingency		**$1,984,510**	**$2,794,020**	**$3,359,921**	**$0**
	Performance Bond (50% of Cost of Bond)		$6,926	$9,285	$10,700	
	Project Total with Fees, Contingency and 50% of Bond		**$1,991,436**	**$2,803,305**	**$3,370,621**	**$0**

Savings if Roofing and Shell are Combined	-$96,397	-$87,703	-$108,824

Riviera Renovations - MEP Preliminary Budget Options - Good - Better - Best - Job #4453

Cost Code	Description		Good Options	Better Options	Best Options	Selected Option
	Hypothetically October - December, 2019					
100	Project Requirements (Primarily for 3 Mos)	A	$0	$0	$0	$0
101	~~Survey/topo - Historic Preservation Survey~~	A	$0	$0	$0	$0
102	~~Stake Building~~	A	$0	$0	$0	$0
103	~~Soil Test~~	A	$0	$0	$0	$0
104	~~Stake Site~~	A	$0	$0	$0	$0
105	~~Stake Curbs~~	A	$0	$0	$0	$0
106	Supervision (good 50%; better 75%; best 100%**) $85 per hour**	C	$22,100	$33,150	$44,200	$0
107	~~Grading~~	A	$0	$0	$0	$0
108	~~Special Assessment - Exclude~~	A	$0	$0	$0	$0
109	Utility Protect/Relocate - Allowance	A	$7,500	$7,500	$7,500	$0
110	State Permit - By Each MEP Trade	C	$0	$0	$0	$0
110-01	State Permit for Historical Review - Presuming this will be part of Shell	C	$0	$0	$0	$0
111	Local Permit - By Each MEP Trade	C	$0	$0	$0	$0
112	~~Construction Elect. - Assume that Owner will pay monthly energy bills~~	C	$0	$0	$0	$0
113	Temp. Heat - Allowance - Interior Work - Not Anticipated - Switch Over?	C	$5,000	$5,000	$5,000	$0
114	Winter Conditions - Allowance for Misc.	A	$2,000	$2,000	$2,000	$0
115	~~Rendering~~		$0	$0	$0	$0
116	~~Temporary Generator - Exclude - Power Exists or by each trade~~		$0	$0	$0	$0
117	Job Trailer - (Allowance of $450/month + $450 transport); Or Room Rental Fee		$1,800	$1,800	$1,800	$0
118	Dumpsters - (Allow. Of 3)	C	$1,650	$1,650	$1,650	$0
119	~~Concrete Testing - (4 sets)~~	C	$0	$0	$0	$0
120	~~Dry Air System - Exclude - See Temp Heat~~	C	$0	$0	$0	$0
121	General Cleaning - Once per Month in addition to regular subs cleaning	C	$3,600	$3,600	$3,600	$0
122	Final Cleaning - For Final Cleaning of Rooms/Ballroom Upon Completion	C	$5,000	$5,000	$5,000	$0
124	Dust Walls - Allowance	C	$3,600	$3,600	$3,600	$0
125	~~Temp Fence - Exclude~~	C	$0	$0	$0	$0
126	Temp Storage Trailers	C	$2,000	$2,000	$2,000	$0
127	Temp Railings (Exter = Scaff.; Inter - Elev.)	C	$1,500	$1,500	$1,500	$0
128	~~Temp Roads~~	C	$0	$0	$0	$0
129	Temp. Toilet (3 mos + move)	C	$500	$500	$500	$0
130	~~Knox Box - Allowance~~	C	$0	$0	$0	$0
133	Reproduction (20 shts x 25 sets)	C	$500	$500	$500	$0
134	~~Electric/Gas/Data Fees - Exclude~~	A	$0	$0	$0	$0
135	UPS - Allowance	C	$500	$500	$500	$0
136	~~Impact Fees - Exclude~~	A	$0	$0	$0	$0
137	~~Barriers/Enclosures - (Encl. Scaffold)~~	C	$0	$0	$0	$0
138	~~Street Cleaning/Snow Removal~~	A	$0	$0	$0	$0
139	~~Shoring - (See Subcontractor Below)~~	A	$0	$0	$0	$0
142	~~Poor Soils Allowance - Exclude~~	A	$0	$0	$0	$0
143	~~Temp Walk Off Mats~~	A	$0	$0	$0	$0
144	Finishes Protection Allowance	A	$1,000	$1,000	$1,000	$0
146	As-Built CD's	C	$1,000	$1,000	$1,000	$0
155	Job Sign	C	$750	$750	$750	$0
156	Temp Signage	C	$375	$375	$375	$0
162	Sewer & Water fees - Fee for a 6" vs. a 4"	A	$0	$0	$0	$0
170	~~Utility relocation - Exclude~~	A	$0	$0	$0	$0
178	~~Civil Engineering - Exclude~~		$0	$0	$0	$0
179	~~Interior Design - (Exterior by Legacy)~~		$0	$0	$0	$0
190	Project Manager (good 50%; better 75%; best 100%) (PM not Proj. Direct.)	C	$6,500	$9,750	$13,000	$0
185	Insurance	1%	$6,730	$10,026	$11,240	**$0**
187	~~Structural Steel Final Design~~	0%	$0	$0	$0	$0
	Project Requirements		**$73,605**	**$91,201**	**$106,715**	**$0**
1520	**Plumbing**					
	Lake Geneva Plumbing		$0	$0	$0	$0
	Minimum - Replace Underfloor Piping and General Remodeling		***$30,975***	$0	$0	$0
	Fixture and Equipment Upgrades/Replacement		***$54,075***	$0	$0	$0
			$0	$0	$0	$0
	Minimum - Replace Underfloor Piping and General Remodeling		$0	***$32,813***	$0	$0
	Fixture and Equipment Upgrades/Replacement - Replace all - manual		$0	***$119,125***	$0	$0
			$0	$0	$0	$0
	Minimum - Replace Underfloor Piping and General Remodeling		$0	$0	***$32,813***	$0
	Fixture and Equipment Upgrades/Replacement - Replace All with Sensored		$0	$0	***$139,125***	$0
			$0	$0	$0	$0
			$0	$0	$0	$0
			$0	$0	$0	$0
1545	**Site Plumbing**					
	Trench Drain Work - Tie in Trench Drain		$0	$0	***$1,500***	$0
			$0	$0	$0	$0
	New 6" Service for Fire Protection		$0	***$36,225***	***$36,225***	$0
			$0	$0	$0	$0
1550	**Fire Protection**					
	Design Build Fire Pro		***$0***	***$75,000***	$0	$0
	Dry System(s) Attic(s)		***$0***	***$15,000***	$0	$0
	1st and 2nd Floor Areas - Wet Systems - Abv 40 Degrees		$0	$0	$0	$0
	6" Service, Storz Connect,		$0	$0	$0	$0
	Alternate 1 - Remote FDC if required		$0	$0	$0	$0
			$0	$0	$0	$0
	KHR Budget ($117,250)		$0	$0	***$117,250***	$0
			$0	$0	$0	$0
1554	**Fire System Monitoring (With Electrical Scope)**					
			$0	$0	$0	$0
1580	**HV/AC**					
	Vorpagel		$0	$0	$0	$0
	Variable Refrig.Flow Wtr. Source Heat Pump - Replaces AC and Condens.		***$388,500***	$0	$0	$0
	HDPE piping for Heat Rejection - Part of Above		$0	$0	$0	$0
	Energy Recovery Ventilation/Demand Cntrl, vent. For 8 upper level systems		$0	$0	$0	$0
	High Efficiency Boiler for Heat to Heat Panels, Radiant Ht., Domestic Wtr.		$0	$0	$0	$0
			$0	$0	$0	$0
	Above Plus Radiant Floor Heat and Repl. Fan Coil Units Tenants/Ballrm.		$0	***$470,400***	$0	$0

			$0	$0	$0	$0
	Above Plus WIFI Controls, Radiant Floor Ht in 1st Floor RR, Repl. Louvers		$0	$0	***$494,300***	$0
			$0	$0	$0	$0
1591	**Refrigeration/Coolers/Kitchen**					
	Food Service Equipment Upgrades (with Interior Alterations)		$0	$0	$0	$0
1600	**Electrical**					
	Giraffe Electric (KHR + 12%)		***$102,600***	$0	$0	$0
	Phase 1 - Emerg. Egress Lighting (1,2), Sec. Lighting/Cameras, Voice/Data		$0	$0	$0	$0
	Switchgear cleanup, Fire Alarm Upgrades, Rescue Assist Area 2nd Floor		$0	$0	$0	$0
	Transformers cleanup, Stair Lighting		$0	$0	$0	$0
			$0	$0	$0	$0
	Phase 2 - Above Plus Miscellaneous Remodeling ($40 K)		$0	***$142,900***	$0	$0
	Elevator wiring, GFI for Winter Fest, Heat Tape Gutters		$0	$0	$0	$0
			$0	$0	$0	$0
	Phase 3 - Upgrades, WIFI Controls, Data Ports, Etc.		$0	$0	***$177,300***	$0
			$0	$0	$0	$0
	Phase 4 - LED Concourse Lighting, Ballroom Cove, Ballroom Fixtures		$0	$0	$0	$0
	See Interior Alterations		$0	$0	$0	$0
			$0	$0	$0	$0
	Additional Allowance For HVAC Equipment Wiring		***$30,000***	***$30,000***	***$30,000***	$0
			$0	$0	$0	$0
			$0	$0	$0	$0
1603	**Security/Communication - (With Electrical Scope)**					$0
			$0	$0	$0	$0
			$0	$0	$0	$0
	Total Cost		**$679,755**	**$1,012,664**	**$1,135,228**	**$0**
169	Arch/Engineering	6.00%	$40,785	$60,760	$68,114	$0
198	Contingency (per KHR Recommendation)	10.00%	$67,976	$101,266	$113,523	$0
	Total Cost		**$788,516**	**$1,174,691**	**$1,316,864**	**$0**
	Contractor's Fee	8.00%	$63,081	$93,975	$105,349	$0
	Project Total with Fees and Contingency		**$851,597**	**$1,268,666**	**$1,422,213**	**$0**
	Performance Bond (50% of Cost of Bond)		$3,358	$4,671	$5,155	
	Project Total with Fees, Contingency and 50% of Bond		**$854,955**	**$1,273,337**	**$1,427,368**	**$0**

Riviera Renovations - Roof, Shell and MEP Prelim. Budget Options - Good - Better - Best - Job #4453

Cost Code	Description		Good Options	Better Options	Best Options	Selected Option
	Hypothetically October - December, 2019					
100	Project Requirements (Primarily for 3 Mos)	A	$0	$0	$0	$0
101	~~Survey/topo - Historic Preservation Survey~~	A	$0	$0	$0	$0
102	~~Stake Building~~	A	$0	$0	$0	$0
103	~~Soil Test~~	A	$0	$0	$0	$0
104	~~Stake Site~~	A	$0	$0	$0	$0
105	~~Stake Curbs~~	A	$0	$0	$0	$0
106	Supervision (good 50%; better 75%; best 100%**) $85 per hour**	C	$22,100	$33,150	$44,200	$0
107	~~Grading~~	A	$0	$0	$0	$0
108	~~Special Assessment - Exclude~~	A	$0	$0	$0	$0
109	Utility Protect/Relocate - Allowance	A	$7,500	$7,500	$7,500	$0
110	State Permit (based on 15,346 sf)	C	$1,250	$1,250	$1,250	$0
110-01	State Permit for Historical Review	C	$15,000	$15,000	$15,000	
111	Local Permit (.30x15346 or $10/$1,000 val)	C	$40,000	$40,000	$40,000	$0
112	~~Construction Elect. - Assume that Owner will pay monthly energy bills~~	C	$0	$0	$0	$0
113	Temp. Heat - Allowance	C	$15,000	$15,000	$15,000	$0
114	Winter Conditions - Allowance	A	$2,000	$2,000	$2,000	$0
115	~~Rendering~~		$0	$0	$0	$0
116	~~Temporary Generator - Exclude~~		$0	$0	$0	$0
117	Job Trailer - (Allowance of $450/month + $450 transport); Or Room Rental Fee		$1,800	$1,800	$1,800	$0
118	Dumpsters - (Allow. Of 3; Roof Allow of 6)	C	$3,900	$3,900	$3,900	$0
119	Concrete Testing - (4 sets)	C	$1,000	$1,000	$1,000	$0
120	~~Dry Air System - Exclude - See Temp Heat~~	C	$0	$0	$0	$0
121	General Cleaning	C	$10,500	$10,500	$10,500	$0
122	Final Cleaning	C	$8,500	$8,500	$8,500	$0
124	Dust Walls - Allowance	C	$3,600	$3,600	$3,600	$0
125	Temp Fence - (Allow. For Base of Scaffold)	C	$5,500	$5,500	$5,500	$0
126	Temp Storage Trailers	C	$2,000	$2,000	$2,000	$0
127	Temp Railings (Exter = Scaff.; Inter - Elev.)	C	$1,500	$1,500	$1,500	$0
128	~~Temp Roads~~	C	$0	$0	$0	$0
129	Temp. Toilet (3 mos + move)	C	$500	$500	$500	$0
130	Knox Box - Allowance	C	$750	$750	$750	$0
133	Reproduction (60 shts x 25 sets)	C	$1,500	$1,500	$1,500	$0
134	~~Electric/Gas/Data Fees - Exclude~~	A	$0	$0	$0	$0
135	UPS - Allowance	C	$500	$500	$500	$0
136	~~Impact Fees - Exclude~~	A	$0	$0	$0	$0
137	Barriers/Enclosures - (Encl. Scaffold)	C	$3,300	$3,300	$3,300	$0
138	Street Cleaning/Snow Removal	A	$6,000	$6,000	$6,000	$0
139	~~Shoring - (See Subcontractor Below)~~	A	$0	$0	$0	$0
142	~~Poor Soils Allowance - Exclude~~	A	$0	$0	$0	$0
143	Temp Walk Off Mats	A	$1,000	$1,000	$1,000	$0
144	Finishes Protection Allowance	A	$4,000	$4,000	$4,000	$0
146	As-Built CD's	C	$1,500	$1,500	$1,500	$0
155	Job Sign	C	$1,500	$1,500	$1,500	$0
156	Temp Signage	C	$750	$750	$750	$0
162	~~Sewer & Water fees - Exclude~~	A	$0	$0	$0	$0
170	~~Utility relocation - Exclude~~	A	$0	$0	$0	$0
178	~~Civil Engineering - Exclude~~		$0	$0	$0	$0
179	~~Interior Design - (Exterior by Legacy)~~		$0	$0	$0	$0
190	Project Management (good 50%; better 75%; best 100%) (PM not Proj. Direct.)	C	$6,500	$9,750	$13,000	$0
123	**Owner Contingency ($xx,xxx)**		**$0**	**$0**	**$0**	**$0**
185	Insurance	1%	**$21,551**	**$31,102**	**$36,645**	**$0**
187	Structural Steel Final Design	0%	$7,500	$7,500	$7,500	$0
	Project Requirements		**$198,001**	**$221,852**	**$241,695**	**$0**
139	**Scaffolding/Shoring - (Exclude if no Guttering)**					
200	**Sitework - (or Demo)**					
243	**Demolition - (Stair/Selective)**					
	Monument Stairs to be Repaired vs. Replaced - See Concrete		$0	$0	$0	$0
	Monument Stair Removal		$0	***$35,700***	$0	$0
	Monument Stair Removal		$0	$0	***$35,700***	$0
300	**Concrete**					
	North Entry Stairs - Repair vs. Replace		***$25,000***	$0	$0	$0
	North Entry Stairs - Replace		$0	***$74,550***	$0	$0
	North Entry Stairs - Replace		$0	$0	***$74,550***	$0
	South Entry Balcony deck/metal Stairs - Needs to be Completed		***$22,874***	***$22,874***	***$22,874***	$0
			$0	$0	$0	$0
300/400	**Concrete/Masonry (See Separate)**					
300/400	**Concrete Cutting/Coring (by trade)**					
340	**Precast - Architectural Sills/Band**					
~~**357**~~	~~**Curb & Gutter**~~					
400	**Masonry - Tuckpointing**					
	Tuckpointing - (Including Scaffolding)			$0	$0	$0
			$0	$0	$0	$0
	Repair South Balc. Wall; Repoint and Clean; 25% Sills Caps; Downspouts		***$514,100***	$0	$0	$0
			$0	$0	$0	$0
	Above Plus: Reconstruct South Balc.; 50% Sills; Partial Repair Banding		$0	***$731,900***	$0	$0
			$0	$0	$0	$0
	Above Plus: Expanding Banding Repair Allowance; 100% Sills; Staining		$0	$0	***$819,250***	$0
500	**Structural Steel - Fabrications**					
	North Entry Stairs		***$49,613***	***$49,613***	***$49,613***	$0
			$0	***$0***	***$0***	$0
	New railings at terrace walls		***$39,000***	***$39,000***	***$39,000***	$0
			$0	***$0***	***$0***	$0
	South Balcony Railings		***$13,700***	***$13,700***	***$13,700***	$0
			$0	$0	$0	$0

510	**Steel Erection - (or by Trade)**					
600	**Carpentry**					
	Allow for Replacement of Underlayment (13,200sf x 10% = 1,320) - Conting.		$0	$0	$0	$0
			$0	$0	$0	$0
700	**Insulation - Upgrades**					
711	**Waterproofing -**					
750	**Roofing - (Clay Tile/Conc. Tile)**					
	Metal Roof Allowance - If Acceptable		***$600,000***	$0	$0	$0
			$0	$0	$0	$0
	Interstate Roofing - Concrete Tile		$0	***$675,000***	$0	$0
			$0	$0	$0	$0
	Renaisance - (if selection from Std Options)		$0	$0	***$880,000***	$0
			$0	$0	$0	$0
			$0	$0	$0	$0
790	**Caulking - (or by trade)**					
800	**Glass & Glazing**					
	Heritage Glass- Allowance for Repairs/Seal		***$100,000***	$0	$0	$0
			$0	$0	$0	$0
	Replacement with Storefront (similar)		$0	***$275,750***	$0	$0
			$0	$0	$0	$0
	Replacement with Winco Simulated Steel Sash Window		$0	$0	***$375,000***	$0
			$0	$0	$0	$0
			$0	$0	$0	$0
806	**Automatic Entrances**					
810	**HM/Hard./Wd Drs - Custom Doors**					
836	**Specialty Doors/Counter Shutters**					
900	**Painting**					
	Allowance for Lintels, Miscellaneous Metals, Etc.		$15,750	$15,750	$15,750	$0
			$0	$0	$0	$0
1420	**Elevator & Convey Systems**					
	Otis Elevator - Leave as Existing		***$0***	$0	$0	$0
	Modernization		$0	***$71,663***	$0	$0
	Replacement of Elevator w/ Roomless		$0	$0	***$85,000***	$0
	Removal of Existing Elevator		$0	$0	***$28,000***	$0
			$0	$0	$0	
1520	**Plumbing**					
	Lake Geneva Plumbing		$0	$0	$0	$0
	Minimum - Replace Underfloor Piping and General Remodeling		***$30,975***	$0	$0	$0
	Fixture and Equipment Upgrades/Replacement		***$54,075***	$0	$0	$0
			$0	$0	$0	$0
	Minimum - Replace Underfloor Piping and General Remodeling		$0	***$32,813***	$0	$0
	Fixture and Equipment Upgrades/Replacement - Replace all - manual		$0	***$119,125***	$0	$0
			$0	$0	$0	$0
	Minimum - Replace Underfloor Piping and General Remodeling		$0	$0	***$32,813***	$0
	Fixture and Equipment Upgrades/Replacement - Replace All with Sensored		$0	$0	***$139,125***	$0
			$0	$0	$0	$0
			$0	$0	$0	$0
			$0	$0	$0	$0
1545	**Site Plumbing**					
	Trench Drain Work - Tie in Trench Drain		$0	$0	***$1,500***	$0
			$0	$0	$0	$0
	New 6" Service for Fire Protection		$0	***$36,225***	***$36,225***	$0
			$0	$0	$0	$0
1550	**Fire Protection**					
	Design Build Fire Pro		***$0***	***$75,000***	$0	$0
	Dry System(s) Attic(s)		***$0***	***$15,000***	$0	$0
	1st and 2nd Floor Areas - Wet Systems - Abv 40 Degrees		$0	$0	$0	$0
	6" Service, Storz Connect,		$0	$0	$0	$0
	Alternate 1 - Remote FDC if required		$0	$0	$0	$0
			$0	$0	$0	$0
	KHR Budget ($117,250)		$0	$0	***$117,250***	$0
			$0	$0	$0	$0
			$0	$0	$0	$0
1554	**Fire System Monitoring (With Electrical Scope)**					
			$0	$0	$0	$0
1580	**HV/AC**					
	Vorpagel		$0	$0	$0	$0
	Variable Refrig.Flow Wtr. Source Heat Pump - Replaces AC and Condens.		***$388,500***	$0	$0	$0
	HDPE piping for Heat Rejection - Part of Above		$0	$0	$0	$0
	Energy Recovery Ventilation/Demand Cntrl, vent. For 8 upper level systems		$0	$0	$0	$0
	High Efficiency Boiler for Heat to Heat Panels, Radiant Ht., Domestic Wtr.		$0	$0	$0	$0
			$0	$0	$0	$0
	Above Plus Radiant Floor Heat and Repl. Fan Coil Units Tenants/Ballrm.		$0	***$470,400***	$0	$0
			$0	$0	$0	$0
	Above Plus WIFI Controls, Radiant Floor Ht in 1st Floor RR, Repl. Louvers		$0	$0	***$494,300***	$0
			$0	$0	$0	$0
			$0	$0	$0	$0
			$0	$0	$0	$0
1591	**Refrigeration/Coolers/Kitchen**					
	Food Service Equipment Upgrades (with Interior Alterations)		$0	$0	$0	$0
1600	**Electrical**					
	Giraffe Electric (KHR + 12%)		***$102,600***	$0	$0	$0
	Phase 1 - Emerg. Egress Lighting (1,2), Sec. Lighting/Cameras, Voice/Data		$0	$0	$0	$0
	Switchgear cleanup, Fire Alarm Upgrades, Rescue Assist Area 2nd Floor		$0	$0	$0	$0
	Transformers cleanup, Stair Lighting		$0	$0	$0	$0
			$0	$0	$0	$0
	Phase 2 - Above Plus Miscellaneous Remodeling ($40 K)		$0	***$142,900***	$0	$0
	Elevator wiring, GFI for Winter Fest, Heat Tape Gutters		$0	$0	$0	$0
			$0	$0	$0	$0
	Phase 3 - Upgrades, WIFI Controls, Data Ports, Etc.		$0	$0	***$177,300***	$0

			$0	$0	$0	$0
	Phase 4 - LED Concourse Lighting, Ballroom Cove, Ballroom Fixtures		$0	$0	$0	$0
	See Interior Alterations		$0	$0	$0	$0
			$0	$0	$0	$0
	Additional Allowance For HVAC Equipment Wiring		***$30,000***	***$30,000***	***$30,000***	$0
			$0	$0	$0	$0
1603	**Security/Communication**					
			$0	$0	$0	$0
			$0	$0	$0	$0
			$0	$0	$0	$0
	Total Cost		**$2,184,188**	**$3,148,815**	**$3,708,645**	**$0**
169	Arch/Engineering	6.00%	$131,051	$188,929	$222,519	$0
198	Contingency (per KHR Recommendation)	10.00%	$218,419	$314,882	$370,865	$0
	Total Cost		**$2,533,659**	**$3,652,626**	**$4,302,028**	**$0**
	Contractor's Fee	8.00%	$202,693	$292,210	$344,162	$0
	Project Total with Fees and Contingency		**$2,736,351**	**$3,944,836**	**$4,646,190**	**$0**
	Performance Bond (50% of Cost of Bond)		$9,141	$12,162	$13,916	
	Project Total with Fees, Contingency and 50% of Bond		**$2,745,492**	**$3,956,998**	**$4,660,106**	**$0**

Savings if Roofing, Shell and MEPs are Combined -$197,296 -$207,347 -$246,707

Riviera Renovations - Interior Alterations - Good - Better - Best Options - Job #4453

Cost Code	Description		Good Options	Better Options	Best Options	Selected Option
	Hypothetically February - April, 2020					
100	Project Requirements (Primarily for 3 Mos)	A	$0	$0	$0	$0
101	~~Survey/topo - Historic Preservation Survey~~	A	$0	$0	$0	$0
102	~~Stake Building~~	A	$0	$0	$0	$0
103	~~Soil Test~~	A	$0	$0	$0	$0
104	~~Stake Site~~	A	$0	$0	$0	$0
105	~~Stake Curbs~~	A	$0	$0	$0	$0
106	Supervision (good 50%; better 75%; best 100%**) $85 per hour**	C	$22,100	$33,150	$44,200	$0
107	~~Grading~~	A	$0	$0	$0	$0
108	~~Special Assessment - Exclude~~	A	$0	$0	$0	$0
109	~~Utility Protect/Relocate - Allowance~~	A	$0	$0	$0	$0
110	State Permit (based on 15,346 sf)	C	$1,250	$1,250	$1,250	$0
110-01	~~State Permit for Historical Review~~	C	$0	$0	$0	$0
111	Local Permit (.30x15346 or $10/$1,000 val)	C	$10,000	$15,000	$20,000	$0
112	~~Construction Elect. - Assume that Owner will pay monthly energy bills~~	C	$7,000	$7,000	$7,000	$0
113	~~Temp. Heat - Allowance - Will Have Permanent~~	C	$0	$0	$0	$0
114	Winter Conditions - Allowance	A	$2,000	$2,000	$2,000	$0
115	~~Rendering~~		$0	$0	$0	$0
116	~~Temporary Generator - Exclude~~		$0	$0	$0	$0
117	Job Trailer - (Allowance of $450/month + $450 transport); Or Room Rental Fee		$1,800	$1,800	$1,800	$0
118	Dumpsters - (Allowance of 6 to 8)	C	$3,300	$3,850	$4,400	$0
119	~~Concrete Testing - (4 sets)~~	C	$0	$0	$0	$0
120	~~Dry Air System - Exclude - See Temp Heat~~	C	$0	$0	$0	$0
121	General Cleaning - Include Portering Once a Week	C	$10,500	$10,500	$10,500	$0
122	Final Cleaning	C	$8,500	$8,500	$8,500	$0
124	Dust Walls - Allowance	C	$3,600	$3,600	$3,600	$0
125	~~Temp Fence - (Allow. For Base of Scaffold)~~	C	$0	$0	$0	$0
126	Temp Storage Trailers	C	$2,000	$2,000	$2,000	$0
127	Temp Railings (Exter = Scaff.; Inter - Elev.)	C	$1,500	$1,500	$1,500	$0
128	~~Temp Roads~~	C	$0	$0	$0	$0
129	Temp. Toilet (3 mos + move)	C	$500	$500	$500	$0
130	~~Knox Box - Allowance~~	C	$0	$0	$0	$0
133	Reproduction (40 shts x 25 sets)	C	$1,000	$1,000	$1,000	$0
134	~~Electric/Gas/Data Fees - Exclude~~	A	$0	$0	$0	$0
135	UPS - Allowance	C	$500	$500	$500	$0
136	~~Impact Fees - Exclude~~	A	$0	$0	$0	$0
137	Barriers/Enclosures	C	$1,650	$1,650	$1,650	$0
138	~~Street Cleaning/Snow Removal~~	A	$0	$0	$0	$0
139	~~Shoring - (See Subcontractor Below)~~	A	$0	$0	$0	$0
142	~~Poor Soils Allowance - Exclude~~	A	$0	$0	$0	$0
143	Temp Walk Off Mats	A	$1,000	$1,000	$1,000	$0
144	Finishes Protection Allowance	A	$4,000	$4,000	$4,000	$0
146	As-Built CD's	C	$1,500	$1,500	$1,500	$0
155	Job Sign	C	$1,500	$1,500	$1,500	$0
156	Temp Signage	C	$750	$750	$750	$0
162	~~Sewer & Water fees - Exclude~~	A	$0	$0	$0	$0
170	~~Utility relocation - Exclude~~	A	$0	$0	$0	$0
178	~~Civil Engineering - Exclude~~		$0	$0	$0	$0
179	~~Interior Design - (Exterior by Legacy)~~		$0	$0	$0	$0
190	Project Management (good 50%; better 75%; best 100%) (PM not Proj. Direct.)	C	$6,500	$9,750	$13,000	$0
185	Insurance	1%	**$11,361**	**$12,336**	**$16,492**	**$0**
187	Structural Steel Final Design	0%	$3,750	$3,750	$3,750	$0
	Project Requirements		**$107,561**	**$128,386**	**$152,392**	**$0**
122	**Cleaning - (in Project Req.)**					
139	**Scaffolding/Shoring - (by Trade Requiring)**					
200	**Sitework - (or Demo)**					
205	**Silt Fence - (at Stair Replace? - Prob. No - Landlocked)**					
243	**Demolition - (Stair/Selective)**					
	Trench Drain Repair		***$8,500***	***$8,500***	***$8,500***	$0
244	**Asbestos Testing**					
245	**Asbestos Removal (Incl. Above)**					
260	**Asphalt - ? - Patching?**					
271	**Fences & Gates - ? - Restor./Rep?**					
280	**Landscaping - ? - Restor/Repla**					
281	**Landscape Plan**					
285	**Lawn Sprinklers - ? Exist. Syst?**					
300	**Concrete**					
	Concrete Paving for Trench Drain Repair		***$32,300***	***$32,300***	***$32,300***	$0
300/400	**Concrete/Masonry (See Separate)**					
300/400	**Concrete Cutting/Coring (by trade)**					
340	**Precast - Architectural Sills/Band**					
~~**357**~~	~~**Curb & Gutter**~~					
400	**Masonry - Tuckpointing**					
500	**Structural Steel - Fabrications**					

	Southeast Steel Stair		*$14,900*	*$14,900*	*$14,900*	$0
510	**Steel Erection - (or by Trade)**					
~~512~~	**Architecural Metal Panels**					
513	**Sheet Metal / S.S. - (or with Roof)**					
600	**Carpentry**					
	General Finish Out Allowance -		$0	$0	$0	$0
	1st Floor Concourse and Restrooms		*$180,900*	*$215,100*	*$249,200*	$0
			$0	$0	$0	$0
	2nd Floor Restrooms		*$51,200*	*$51,200*	*$51,200*	$0
			$0	$0	$0	$0
	Ballroom - Ceiling Rem/Replace, Railings, Paint, Etc.		*$516,400*	*$516,400*	*$516,400*	$0
			$0	$0	$0	$0
	Tenant Storage Improvements		*$16,000*	*$24,000*	*$32,000*	$0
			$0	$0	$0	$0
	Mechanical Room Upgrades -		*$5,000*	*$9,000*	*$14,200*	$0
			$0	$0	$0	$0
~~605~~	**Truss/Wood**					
641	**Cabinets**					
	Upgrades for Countertops/Support Areas		*$16,300*	*$16,300*	*$16,300*	$0
700	**Insulation - Upgrades?**					
711	**Waterproofing - ?**					
750	**Roofing - (Clay Tile/Conc. Tile)**					
~~758~~	**Roof Top Screening**					
790	**Caulking - (or by trade)**					
800	**Glass & Glazing**					
806	**Automatic Entrances**					
810	**HM/Hard./Wd Drs - Custom Doors**					
836	**Specialty Doors/Counter Shutters**					
900	**Painting**					
902	**Paint Touch up**	**A**				
925	**Studs, drywall, Insulation**					
930	**Hard Tile - (Wall Tile Restor.)**					
950	**Acoustical Ceiling**					
955	**Wood Flooring - (Dance Floor)**					
	Re-Finish Floor		*$20,000*	*$0*	*$0*	$0
	Replace Floor		*$0*	*$51,500*	*$51,500*	$0
			$0	$0	$0	$0
~~956~~	**Sport Court Flooring**					
960	**Flooring - Terrazzo Restoration?**					
965	**Floor Prep**					
981	**Sealed Concrete/Epoxy Floors**					
1000	**Toilet Partitions/Accessories**					
1010	**Marker/Chalk/Tack Boards**					
1020	**Folding Partitions**					
1025	**Fire Extinguishers**					
~~1030~~	**Fireplace**					
1035	**Flag Poles - ?**					
1040/45	**Interior/Exterior Signage - ?**					
1047	**Awnings**					
1050	**Interior Specialties - ?**					
1104	**Audio Visual Equipment - ?**					
	Budget		*$0*	*$0*	*$52,500*	$0
1219	**Office Furniture - ?**					
	Budget		*$0*	*$0*	*$236,145*	$0
1220	**Blinds - ?**					
1420	**Elevator & Convey Systems**					
~~1430~~	**Cranes & Hoists**					
~~1440~~	**Dock Equipment**					

1520	**Plumbing**					
1545	**Site Plumbing**					
	Connect Trench Drain		***$1,500***	***$1,500***	***$1,500***	$0
1550	**Fire Protection**					
	Allowance to Adjust/Move Heads		***$17,300***	***$17,300***	***$17,300***	$0
1554	**Fire System Monitoring - See Electrical**					
1580	**HV/AC**					
	Additional Ductwork/Remodeling		***$38,600***	***$38,600***	***$38,600***	$0
1591	**Refrigeration/Coolers/Kitchen**					
	Food Service Equipment Upgrades		$0	$0	$59,850	$0
1600	**Electrical**					
	Main Concourse Lighting		***$14,000***	***$14,000***	***$14,000***	$0
			$0	$0	$0	$0
	Replace Ballroom Cove Lighting		***$42,600***	***$42,600***	***$42,600***	$0
			$0	$0	$0	$0
	Replace Ballroom Lighting		***$38,100***	***$38,100***	***$38,100***	$0
			$0	$0	$0	$0
	Miscellaneous Electrical		***$30,000***	***$30,000***	***$30,000***	$0
			$0	$0	$0	$0
1603	**Security/Communication**					
	Total Cost		**$1,151,161**	**$1,249,686**	**$1,669,487**	**$0**
169	Arch/Engineering	6.00%	$69,070	$74,981	$100,169	$0
198	Contingency (per KHR Recommendation)	10.00%	$115,116	$124,969	$166,949	$0
	Total Cost		**$1,335,346**	**$1,449,636**	**$1,936,605**	**$0**
	Contractor's Fee	8.00%	$106,828	$115,971	$154,928	$0
	Project Selling Price		**$1,442,174**	**$1,565,607**	**$2,091,534**	**$0**
	Performance Bond (50% of Cost of Bond)		$5,218	$5,607	$7,263	$0
	Project Total with Fees, Contingency and 50% of Bond		**$1,447,392**	**$1,571,214**	**$2,098,797**	**$0**

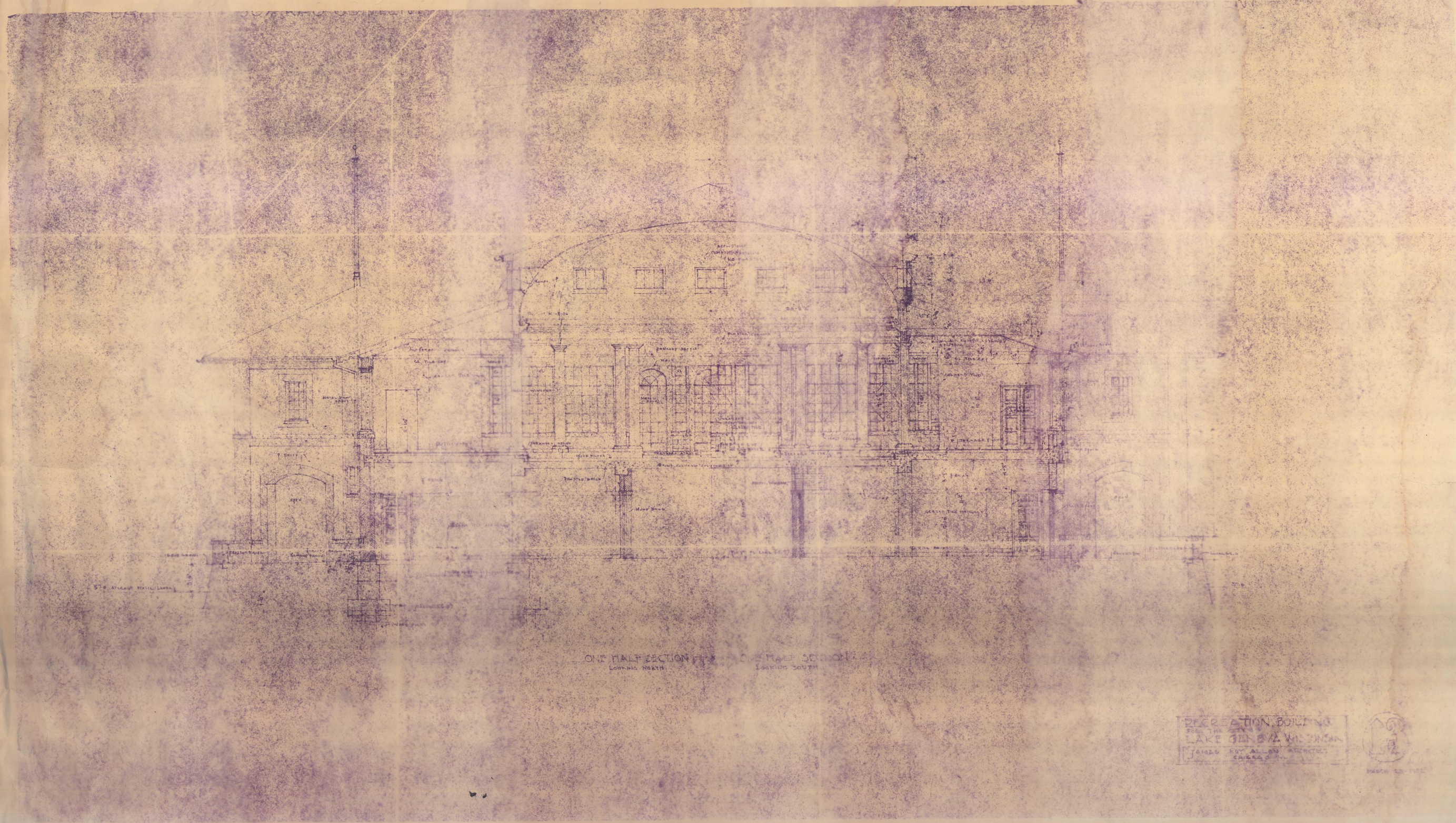
ONE HALF SECTION
LOOKING NORTH
ONE HALF SECTION
LOOKING SOUTH
RECREATION BUILDING
FOR THE
LAKE GENEVA WISCONSIN
JAMES KEY ALLEN ARCHITECT
CHICAGO

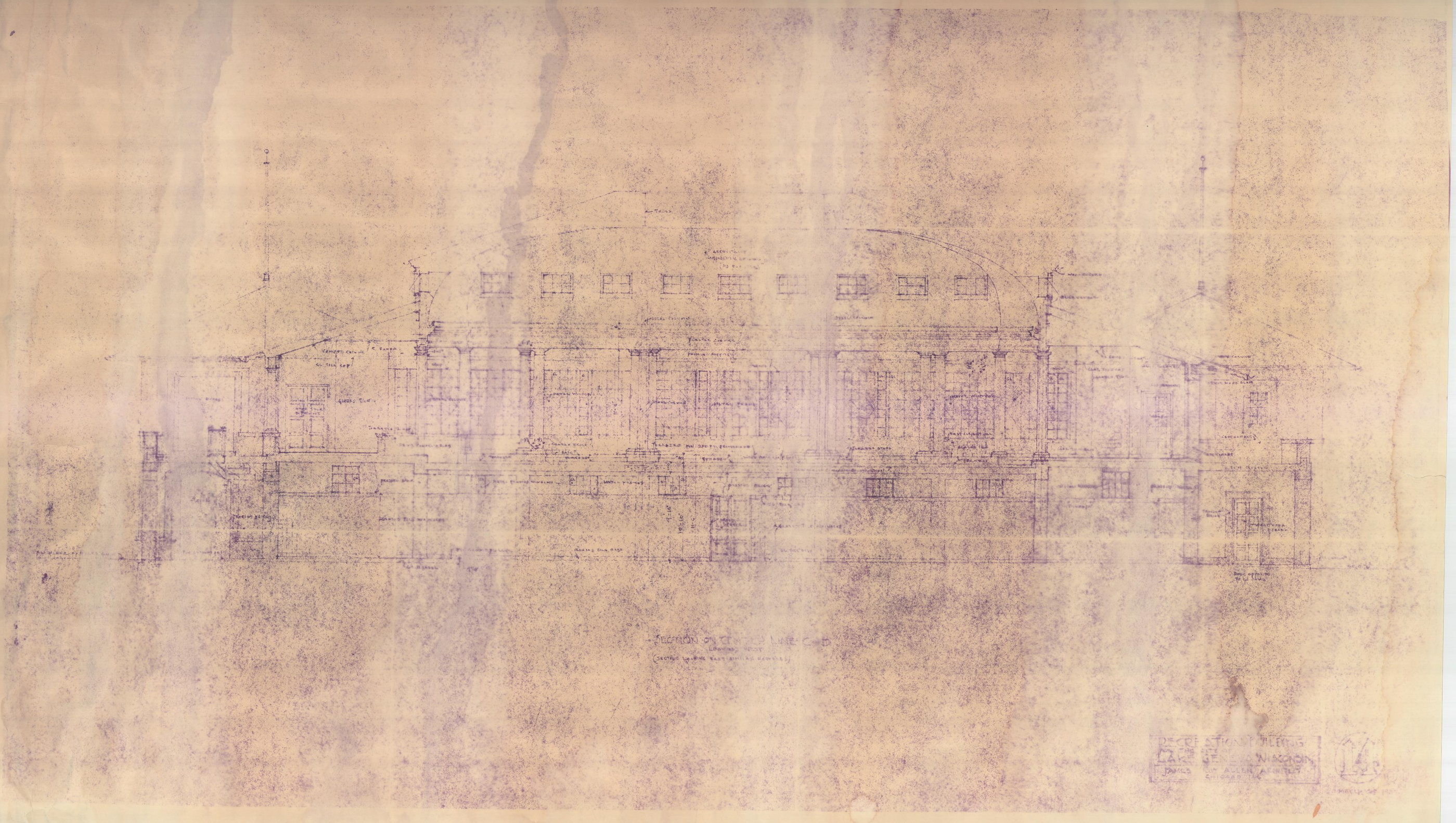
SECTION ON
RECREATION BUILDING
WISCONSIN

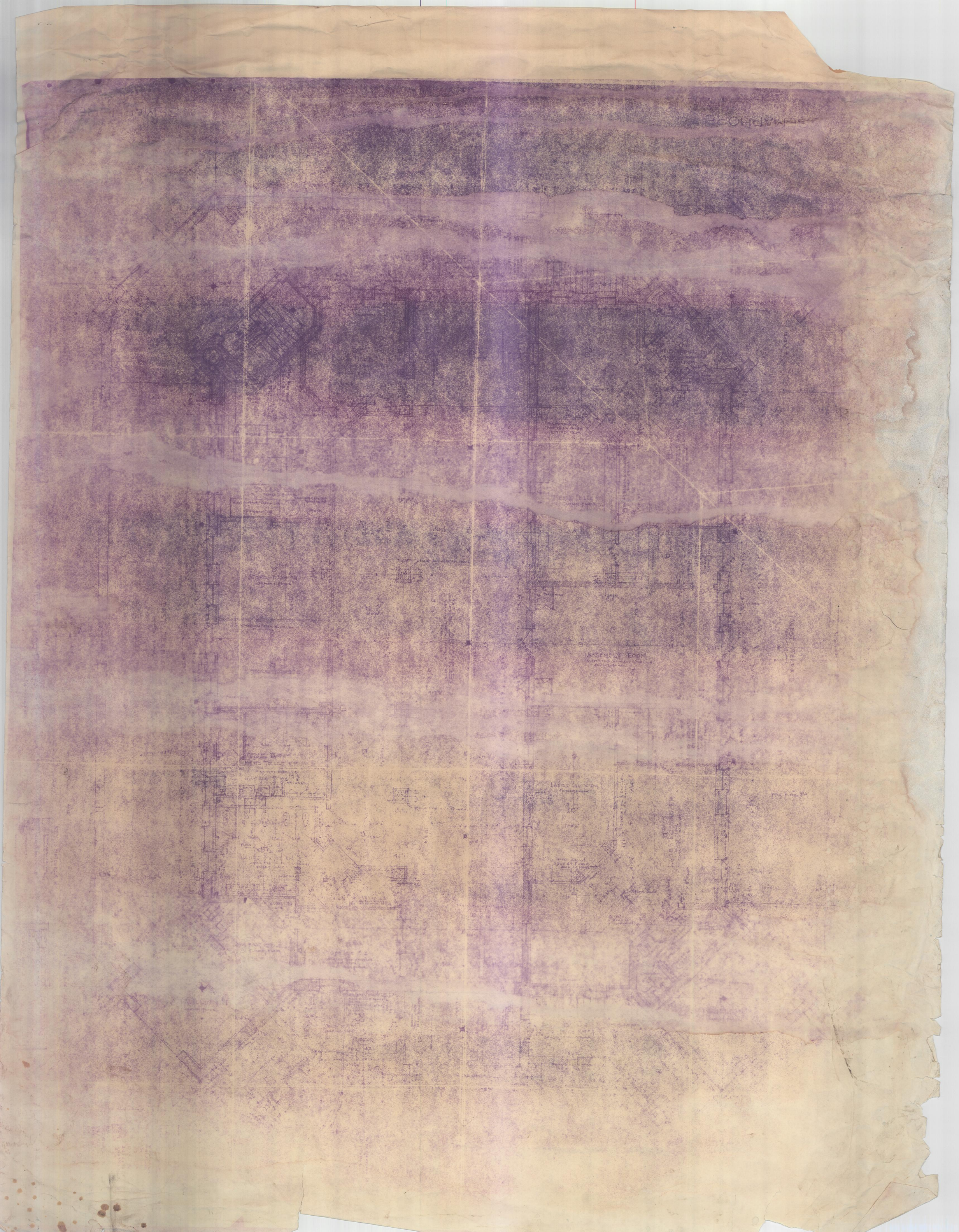
ASSEMBLY ROOM
LADIES RECEPTION
10'

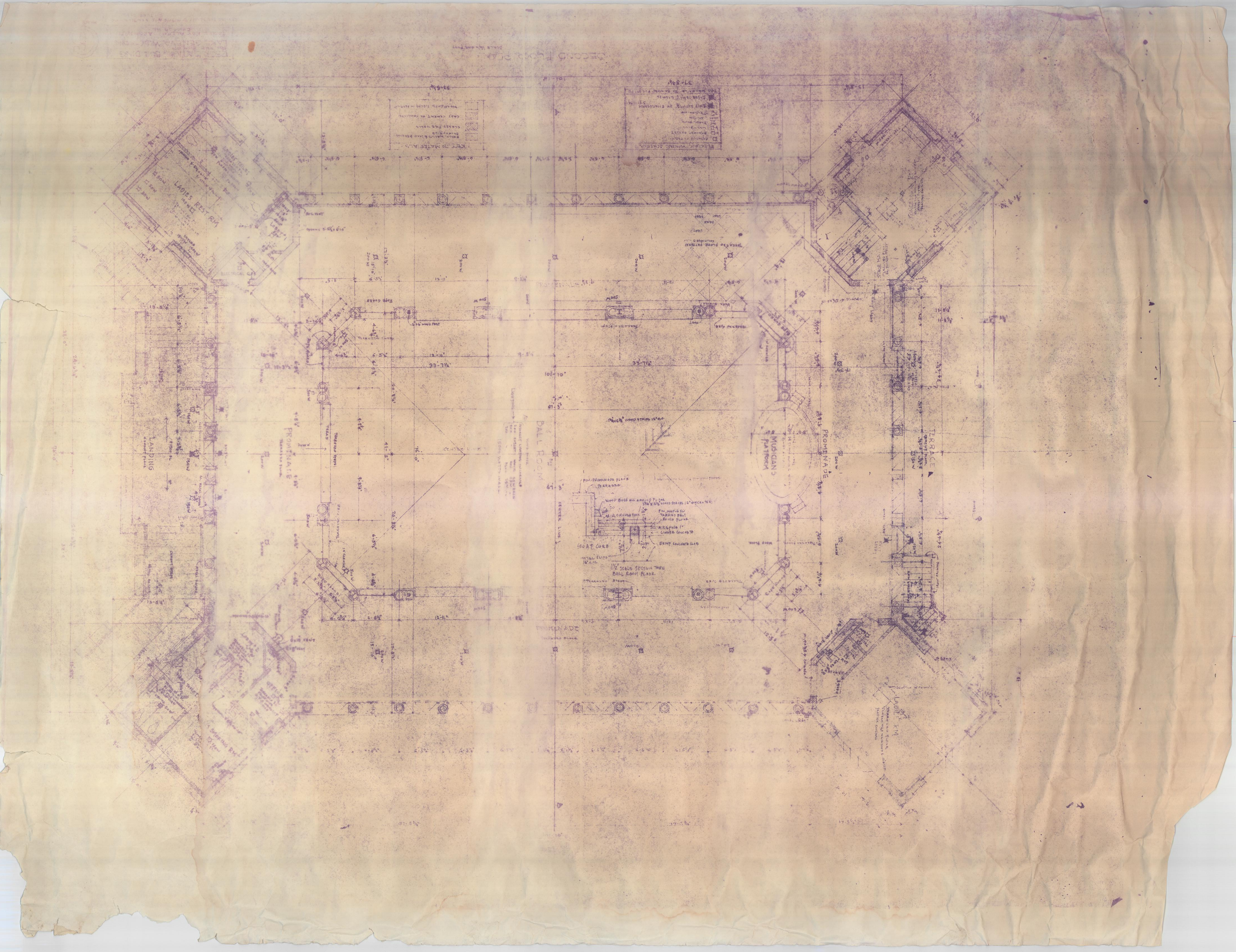
LADIES REST RM
LANDING
PROMENADE
BALL ROOM
MUSICIAN'S PLATFORM
PROMENADE
TERRACE
1½" SCALE SPECIMEN THRU BALL ROOM FLOOR

Nº 1 P/Pal.

CORNERSTONE RESTORATION LLC

901 FRONT ST. SULLIVAN WI 53119

9/10/2018

Cornerstone Restoration LLC

The Riviera Revitalization Project

812 Wrigley Dr. Lake Geneva, WI 53147

Greetings,

During our site visit on the 30th of August we were able to assess the exterior masonry envelope condition and challenges at a rudimentary level. Below we have outlined some of the observations that require more extensive exploration.

Due to the building's historic significance and iconic stature in the community extra care will be needed in developing scope of work, materials, and repair procedures. It is critical that these items be fully explored and developed as a restoration of this magnitude is unlikely to be preformed again for perhaps a century!

As the work scope is explored and inspections are performed attention to the national guidelines for historic restoration must be allowed to dictate the development. Historic details can be destroyed or lost if the guidelines are overlooked. We are ever vigilant with this constantly on the forefront as we proceed.

South Balcony:

- Failed urethane membrane system
- Structural failures in masonry enclosures and retention railings
- Structural failures in elevated cast in place decking
- Moisture diversion issues
- Safety compliance failures

Concrete:

- Threshold failures
- Access stair failures
- Sunken/cracked slab on grade locations
- Improper pitch locations

Masonry Veneer:

- Widespread areas of deteriorated joints
- Failed masonry units
- Deteriorated sill stones and center band stones
- Nonconforming masonry additions
- Mechanical penetrations and noncompliant electrical surface mount items
- Abandoned anchor points
- Sealant failures at material transitions

You have been entrusted with the care of an extraordinary structure. The structure itself is well built but has come to a crossroad and is in need of repair. The recommended investigative reporting is necessary to protect from further and more substantial failures going forward. We look forward to bring your property back to structural security and aesthetic brilliance!

Respectfully,

Kyle O'Brien

Kyle O'Brien

kyle@masonrywi.com

Cornerstone Restoration LLC

MasonryWI.com

Cornerstone Restoration LLC
901 FRONT ST.
SULLIVAN, WI 53178
(262) 832-1179
Info@MasonryWI.com
www.MasonryWI.com

PROPOSAL 3009

DATE 09/10/2018

EXPIRATION DATE 03/10/2019

ADDRESS
The Riviera Project
812 Wrigley Dr.
Lake Geneva WI 53174

P.O. NUMBER
4553

ACTIVITY	AMOUNT
Provide exterior masonry facade invesigation and report.	4,700.00

TOTAL **$4,700.00**

Accepted By

Accepted Date

Design Build Fire Protection of Wisconsin, Inc.

September 13, 2018

Dave Luterbach
MSI General
P.O. Box 7
Oconomowoc, WI 53066

Re: Fire Protection Consultant Report
Riviera Building

Dear Dave,

Design Build Fire Protection is pleased to provide our report detailing recommendations for a new sprinkler system as part of the renovations for the Riviera project. A site visit was conducted on August 30th.

Observations and Recommendations:

- Attic space appears to be combustible and would require a dry system to protect this space. The plaster ceiling would need to be removed to evaluate what would be required to be protected and best method to provide proper coverage.

- All pipe would need to be concealed, dry pendants off the dry system would eliminate need for soffits. Above ceiling survey would be needed to verify if there is sufficient space to install dry pendants.

- 1st floor areas is existing retail space will remain as is, no remodeling on this floor at this time. This space will have a wet system in it so the entire floor needs to heated and remain above 40 degrees to avoid freezing of pipe.

- Existing water service comes in at first floor mechanical room on north side of the building. This service is not large enough to provide adequate water for a new sprinkler system. A new 6" water service will be required (I have not included in my budget pricing). This room would be a good location for the new water service.

- We recommend locating all control valves as well as air compressor for dry system in same room as new water service.

- A Storz fire department connection will need to be located on North side of the building and must be within 100' of a hydrant. There appears to be hydrants on the street but may exceed 100', I will provide budget pricing for a remote FDC this will need to be verified with Lake Geneva Fire Department if a remote FDC will be required.

17055 W. Victor Road • New Berlin, Wisconsin 53151 • Phone: 262-784-7900 • Fax: 262-784-8401

- Sprinkler system for this building will need to meet NFPA #13 and local AHJ requirements. Sprinkler system will need to be monitored, it is assumed there will be an alarm system to connect flow, tamper and pressure switches.

- There may be asbestos in this building, if we provide the bid documents we would exclude any abatement.

Engineering Fee:

- To provide engineering for FP plans and specifications for bidding this project. **$ 2,000.00**

Budget pricing:

- Budget price for new sprinkler system per our recommendations and observations, this does not include a new water service or system monitoring. **$75,000.00**

➢ **Alternate #1:** Provide a budget for remote FDC if required, final price cannot be determined until we know where city would approve the location of the FDC. **ADD $15,000.00**

Thank you for the opportunity to be involved in this project. If you have any questions please don't hesitate to contact me at (262) 784-7900.

Sincerely,
Design Build Fire Protection of WI, Inc.

Mike Dolata

Mike Dolata
Sales Manager

Historic Riviera Building Improvements Project Preliminary Budgets

Preliminary Budgets of Preconstruction and Improvements

October 18, 2018

Introduction/Preface

Please note that all of these numbers are Preliminary Budgets. We recognize that, as we are authorized, we will assemble Bid Packages containing plans, specifications and administrative details as required to competitively bid each of these aspects of the work.

Also, these budgets have been assembled with the goal of providing open communications and flexibility. We have assembled various options for phasing the work as if it is completed individually as “stand alone” projects and/or combined with other aspects of the work.

Additionally we are providing, “Good, Better, Best” options within each aspect of the work. This includes for our Project Requirements (General Conditions) - items such as Supervision, Dumpsters, Permits, Cleaning, Safety, Temporary Heat, Job Trailor/Office, Protection, Etc.

Preliminary Budgets for Preconstruction Activities

Marine Investigations and ACM Survey and Work

Marine Investigations

The Preliminary Budget for Marine Investigations will be between $15,078 and $20,962. The work would include a 3-Man team and equipment as required to complete an underwater survey or investigation of how the 2013 Seawall Repairs are holding up as well as sounding and/or probing the piles/timbers that are supporting the pier system (or at least a representative sample of them). The crew has budgeted two (2) 10 hour days to complete this work. A report, along with video and records, will be provided upon completion.

Asbestos Containing Materials (ACM)/Lead Paint Survey & Work

The Preliminary Budget for the ACM Survey and Work will be between $76,857 and $118,657. Please note that these numbers are very preliminary and will vary greatly depending on what the survey finds and to what extent those areas will be part of the work to be remodeled. Typically common locations we will find ACMs include window caulking, vinyl floor tiles (usually 8” x 8”), adhesives and mastics for flooring, and pipe fittings and insulation. The initial survey and testing of the samples will run between $11,000 and $18,000 and the abatement or encapsulation of the ACM/Lead Paint would be the remainder of the budgets.

Building Improvements

To provide the greatest degree of flexibility of budget and schedule we have assembled the following Preliminary Budgets: **Roofing Only; Shell Only; Roofing and Shell Combined; Mechanical, Electrical, Plumbing (MEP); Roofing, Shell and MEP Combined.**

Roofing Only

The Preliminary Budgets for Roofing are Good Option – Metal Roofing System - $842,960; Better Option – Concrete Tile System - $957,262 and Best Option – Clay Tile - $1,238,224. These numbers include the Roofing and Project Requirements. Decision making criteria will be provided in a separate summary but considerations will include: Budget, Warranty, Expected Life, Installation Considerations, Repair Considerations, Durability and Appearance and Environmental.

It should be noted that the Preliminary Budget for the Metal Roofing System is an allowance at this time. It is based on the one possible material that has subsequently been turned down by the State Historical Office. We are investigating other options that may be acceptable and could perhaps be even less expensive than the preliminary budget.

Shell Only

The Preliminary Budgets for the remaining Shell work will be between $1,244,873 and $2,241,221. The remaining Shell work includes: Tuckpointing, repairs and replacements; Window repairs and/or replacement; Elevator modernization or replacement; North entry stairs and railings repair or replacement, South balcony walls, railings and deck repairs and/or replacement; structural underside concrete repairs, new terrace railings; incidental painting of lintels, metal fabrications, etc.

Roofing and Shell Combined

The Preliminary Budgets for Combining the Roofing and Shell work into one phase or mobilization will be between $1,991,436 and $3,370,621. The totals would depend on which option of which aspect is selected. The savings to the project would be between <$87,703> to <$108,824>. These come from more efficient use of the Project Requirements.

Mechanical, Electrical and Plumbing (MEPs)

The Mechanical, Electrical and Plumbing (MEPs) will include plumbing, site plumbing, fire protection, heating ventilation air conditioning (HVAC) and electrical. The Preliminary Budgets for this work will be between $854,955 and $1,427,368. The Good Option includes minimal work to upgrade the systems for the future. The Better Option adds to that scope. The Best Option would include all recommendations.

Roofing, Shell and MEPs Combined

The Preliminary Budgets for combining the Roofing, Shell and MEPs in one phase will be between $2,745,492 and $4,660,106. The savings to the project would be between <$197,296> to <$246,707>. Again, these come from more efficient use of the Project Requirements.

Interior Alterations

It should be noted that the above Preliminary Budgets DO NOT include work for Interior Alterations at this point. This is due to not having a clearly defined scope of work – especially for the programming of the 1st Floor concourse and shops area.

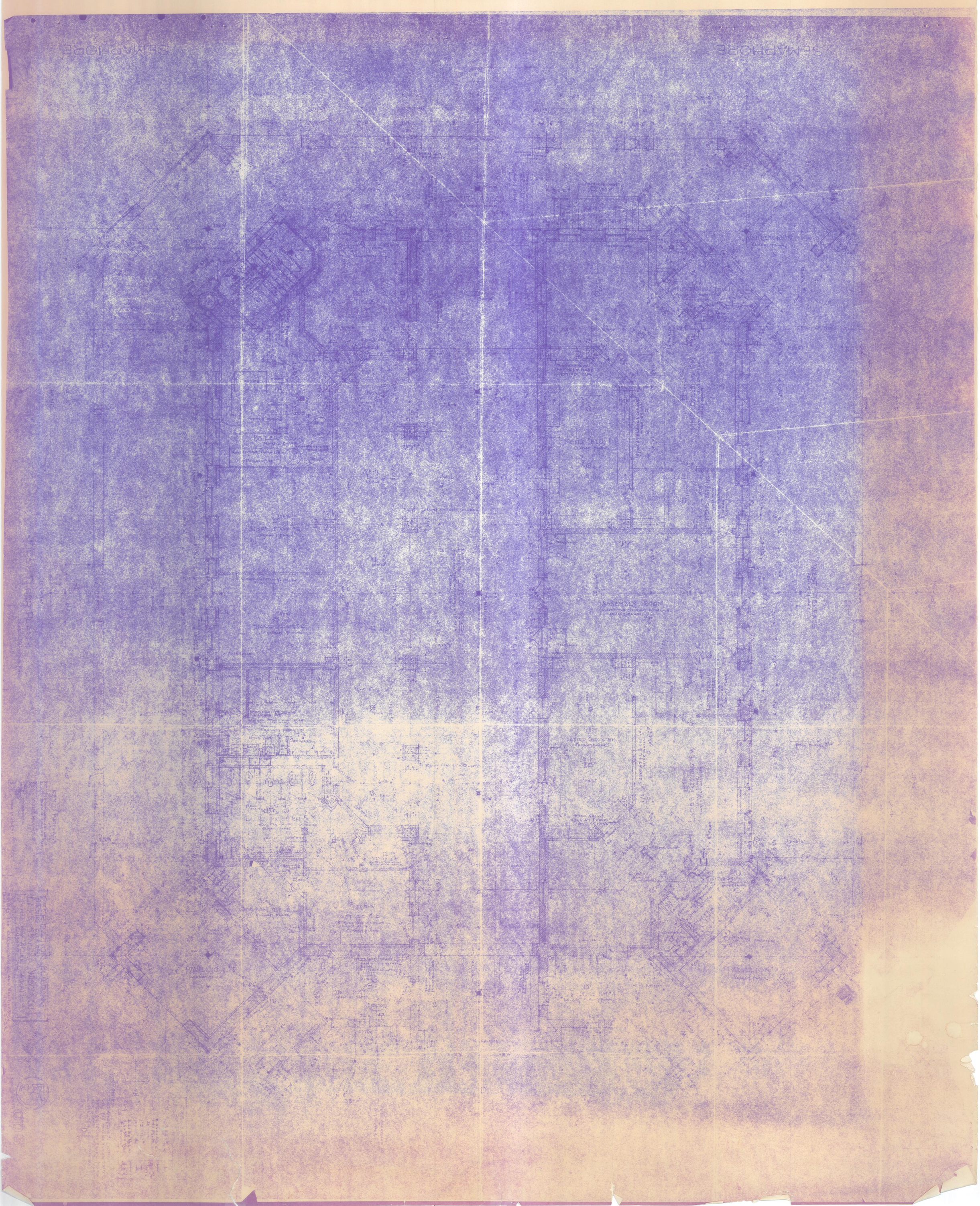

GENERAL NOTES

1. PAINT AND REPAIR AS NECESSARY

NEW WALL KEY

INDICATES NEW WALL

INDICATES EXISTING

FIRST FLOOR INTERIOR REMODEL PLAN
1 C
1/4" = 1'-0"

MSI GENERAL

MSI GENERAL CORPORATION
P.O. BOX. 7
OCONOMOWOC, WI 53066
PHONE: 262-367-3661
FAX: 262-367-7390

WWW.MSIGENERAL.COM

SINGLE SOURCE RESPONSIBILITY ™

ISSUE DATES:	
Proposal:	
Bid:	
Contract:	
Plan Commision:	
State Submittal / Permit:	
As-Built:	
REVISIONS:	
1	PR #1 11/01/2019
2	PR #2 02/10/2020
3	AS BUILTS 04/24/2020
4	
5	
6	
7	
8	
9	
10	
11	
12	
13	
14	
15	
16	
17	
18	
19	
20	
21	
22	
23	
24	
25	
26	
27	
28	
29	
30	

KEY PLAN

THE RIVIERA
LAKE GENEVA, WI

PROJECT ADDRESS:

PROJECT NAME
The Riviera Building
STREET ADDRESS
812 Wrigley Drive
CITY/ STATE / ZIP
Lake Geneva, WI 53147

ALL WORK TO BE COMPLETED AS SHOWN, AND IN ACCORDANCE WITH THE LATEST EDITION OF THE MSI GENERAL MASTER SPECIFICATION

Architect:	Engineer:	Reviewed By:
ANK	AGR	BJZ

Sheet Title:
FIRST FLOOR INTERIOR REMODEL OPTION A

Sheet Number:
A-108 A

Project Number: P12109

4453

MANAGERS . ENGINEERS . CONTRACTORS . ARCHITECTS

GENERAL NOTES

1. PAINT AND REPAIR AS NECESSARY

NEW WALL KEY

INDICATES NEW WALL

INDICATES EXISTING

FIRST FLOOR INTERIOR REMODEL PLAN

1 D

1/4" = 1'-0"

MSI GENERAL

MSI GENERAL CORPORATION
P.O. BOX. 7
OCONOMOWOC, WI 53066
PHONE: 262-367-3661
FAX: 262-367-7390

WWW.MSIGENERAL.COM

SINGLE SOURCE RESPONSIBILITY ™

ISSUE DATES:	
Proposal:	
Bid:	
Contract:	
Plan Commision:	
State Submittal / Permit:	
As-Built:	
REVISIONS:	
1	PR #1 11/01/2019
2	PR #2 02/10/2020
3	AS BUILTS 04/24/2020
4	
5	
6	
7	
8	
9	
10	
11	
12	
13	
14	
15	
16	
17	
18	
19	
20	
21	
22	
23	
24	
25	
26	
27	
28	
29	
30	

KEY PLAN

THE RIVIERA

PROJECT ADDRESS:

PROJECT NAME
The Riviera Building
STREET ADDRESS
812 Wrigley Drive
CITY/ STATE / ZIP
Lake Geneva, WI 53147

ALL WORK TO BE COMPLETED AS SHOWN, AND IN ACCORDANCE WITH THE LATEST EDITION OF THE MSI GENERAL MASTER SPECIFICATION

Architect:	Engineer:	Reviewed By:
ANK	AGR	BJZ

Sheet Title:
FIRST FLOOR INTERIOR REMODEL OPTION B

Sheet Number:

A-108 B

Project Number: P12109

4453

MANAGERS . ENGINEERS . CONTRACTORS . ARCHITECTS

1 FIRST FLOOR INTERIOR REMODEL PLAN
OPTION C
1/4" = 1'-0"

GENERAL NOTES

1. PAINT AND REPAIR AS NECESSARY

NEW WALL KEY

INDICATES NEW WALL

INDICATES EXISTING

MSI GENERAL

MSI GENERAL CORPORATION
P.O. BOX. 7
OCONOMOWOC, WI 53066
PHONE: 262-367-3661
FAX: 262-367-7390

WWW.MSIGENERAL.COM

SINGLE SOURCE RESPONSIBILITY ™

ISSUE DATES:
Proposal:
Bid:
Contract:
Plan Commision:
State Submittal / Permit:
As-Built:
REVISIONS:
1 PR #1 11/01/2019
2 PR #2 02/10/2020
3 AS BUILTS 04/24/2020
4
5
6
7
8
9
10
11
12
13
14
15
16
17
18
19
20
21
22
23
24
25
26
27
28
29
30

KEY PLAN

THE RIVIERA
LAKE GENEVA, WI

PROJECT ADDRESS:

PROJECT NAME
The Riviera Building
STREET ADDRESS
812 Wrigley Drive
CITY/ STATE / ZIP
Lake Geneva, WI 53147

ALL WORK TO BE COMPLETED AS SHOWN, AND IN ACCORDANCE WITH THE LATEST EDITION OF THE MSI GENERAL MASTER SPECIFICATION

Architect:	Engineer:	Reviewed By:
ANK	AGR	BJZ

Sheet Title:
FIRST FLOOR INTERIOR REMODEL OPTION C

Sheet Number:
A-108 C

Project Number: P12109

4453

MANAGERS . ENGINEERS . CONTRACTORS . ARCHITECTS

1 FIRST FLOOR INTERIOR REMODEL PLAN
OPTION D
1/4" = 1'-0"

GENERAL NOTES

1. PAINT AND REPAIR AS NECESSARY

NEW WALL KEY

INDICATES NEW WALL

INDICATES EXISTING

MSI GENERAL

MSI GENERAL CORPORATION
P.O. BOX. 7
OCONOMOWOC, WI 53066
PHONE: 262-367-3661
FAX: 262-367-7390

WWW.MSIGENERAL.COM

SINGLE SOURCE RESPONSIBILITY ™

ISSUE DATES:	
Proposal:	
Bid:	
Contract:	
Plan Commision:	
State Submittal / Permit:	
As-Built:	
REVISIONS:	
1	PR #1 11/01/2019
2	PR #2 02/10/2020
3	AS BUILTS 04/24/2020
4	
5	
6	
7	
8	
9	
10	
11	
12	
13	
14	
15	
16	
17	
18	
19	
20	
21	
22	
23	
24	
25	
26	
27	
28	
29	
30	

KEY PLAN

THE RIVIERA

PROJECT ADDRESS:

PROJECT NAME
The Riviera Building
STREET ADDRESS
812 Wrigley Drive
CITY/ STATE / ZIP
Lake Geneva, WI 53147

ALL WORK TO BE COMPLETED AS SHOWN, AND IN ACCORDANCE WITH THE LATEST EDITION OF THE MSI GENERAL MASTER SPECIFICATION

Architect:	Engineer:	Reviewed By:
ANK	AGR	BJZ

Sheet Title:
FIRST FLOOR INTERIOR REMODEL OPTION D

Sheet Number:
A-108 D

Project Number: P12109

4453

MANAGERS . ENGINEERS . CONTRACTORS . ARCHITECTS

THE GENEVA LAKE PLUMBING CO.

Address:
710 Bennet Dr, Walworth, WI 53184

Email:
genevalakeplumbing@yahoo.com

Phone/Fax:
262-275-3126

Dave,

Thank you for having me help with this project. I have read the KH report but I do not have any budget notes otr paperwork. I cannot help with that until I receive the budget for the plumbing.

I will go thru your E mail to me by floors.

- I do not believe there is any way to make the restrooms ADA accessible without MAJOR structural changes to the building. I believe these the best way to make more room is to lose a toilet stall in all of the required restrooms.
- I also believe any work on the ground (1st) floor should not be done unless the inground drains that are collapsing are dealt with and replaced. I would camera all of these lines, locate and then decide the best course of action.
- Some of the water piping should be replaced and shut off valves for each area should be installed.
- The Crusie line service kitchen drains are poor at best. This area should see some drain replacement.

1st FLOOR RECOMMENDATIONS:

- I would replace all fixtures with ADA COMFORT HEIGHT toilets. We could lose 1 Urinal the east bathroom to allow more access.
- I would replace all lav faucets with updated hands free fauctes.
- I think all of the lavs should be undermout solid surface type for cleaning.

2nd FLOOR

- I do not think there should be any location changes to this room. This room has these restrooms locked into the current locations.
- I do not think you can lose any water closets for ADA space. These restrooms are busy during the functions held there.

2nd FLOOR RECOMMENDATIONS.

- The area below the Men's restroom requires some heat and insulation. I suggest a meeting with the HVAC people to come up with a better solution. We could remove most of the plumbing to allow heat access and then re plumb the area after the heat has been installed to this area. There should be a weather tight door to cover this area. This is expose to the lake and it gets cold in this area.
- I would replace all of the water closets with ADA Comfort height toilets and new hand free flush valves in all of the restrooms.
- I would replace the lav faucets with Hands Free lav fauctes.
- I think the lavs should be an undermount solid surface style for cleaning.
- The kitchen and bars are in Ok condition.

THE GENEVA LAKE PLUMBING CO.

Address:
710 Bennet Dr, Walworth, WI 53184

Email:
genevalakeplumbing@yahoo.com

Phone/Fax:
262-275-3126

- The icemaker drain has been a problem before and this may need to be re plumbed to avoid any firhter problems.

OTHER NOTES

- There is a new A.O. Smith Vertex water heater in the rear Mechanical room. If hydronic heat is installed in this project I would add a storage (Smart) tank to this area. This would provide the building with unlimited hot water.
- The front meter room needs a new mop sink and water repiping.
- We should figure out a way to provide the Cruise line with better water service.
- We should get heat the 1st floor restrooms that get winterized.

Dave, I hope this helps. Call me anytime. Get me the budget number so I can see if they work. I also think this building plumbing could survive about 5 years before it will require major work.

Kevin Racky

Pres. The Geneva Lake Plumbing Co. Inc.

GRAFFE Electric II, Inc.
2025 S. West Avenue, Waukesha, WI 53189
Phone: 262-549-6500 / Fax: 262-549-6503

9/10/18

MSI General
PO Box 7
Oconomowoc WI

Dave Luterbach

Re. Riviera Building
Lake Geneva WI
Assessment to improvements

After review of the Riviera electrical system we have the following recommendations per phase breakdown

Phase 1

- Provide emergency egress lighting interior and exterior at both levels
- Provide fire alarm devices throughout main concourse
- The electrical service size is 480Y/277volts, 1200amp three phase underground and is adequate for the loads that are present
- Electrical service switch gear located Mechanical room A and B
    - Torque all connections to bus bars and overcurrent protection devices
    - Clean all terminations
    - Infrared imaging to all overcurrent protection devices
    - Clean/sand, prime and paint exterior of cabinets and panels of all rust
    - Remove existing labeling and replace with proper labels to all cabinets and panels
    - Remove existing panel directories and provide new accurate typewritten directories indication rooms/area/equipment being served covered with clear plastic with a metal frame.
    - Provide current available short circuit/breaker amp/pole rating
    - Provide Arc Flash study
    - Provide engraved three-layer laminated plastic, 1” black letters on white background for normal power and red on white background nameplates
- Electrical transformers
    - Torque all connections to lugs terminations
    - Clean all terminations and transformer cores
    - Provide proper grounding electrode
    - Clean/paint exterior of transformers of all rust
    - Provide engraved three-layer laminated plastic, 1” black letters on white background nameplates

GRAFFE Electric II, Inc.
2025 S. West Avenue, Waukesha, WI 53189
Phone: 262-549-6500 / Fax: 262-549-6503

Phase 2

- Provide upgraded LED lighting on exterior of building
- Provide LED step lighting
- Provide wiring to HVAC system
- Provide wiring to update elevator
- Provide area of rescue
- Provide additional emergency egress lighting
- Provide de-icing heat tape for gutter/down spouts
- Provide exterior GFI receptacles for winter festivals
- Provide cabling for security –exterior cameras

Phase 3

- Provide upgrades to newly renovated areas
- Provide wiring to HVAC system
- Provide complete security system –
- Provide cabling for access points (WIFI)

Phase 4

- Provide new LED lighting at newly renovated areas
- Provide new LED lighting at concourse
- Provide new LED lighting at ball room overhead, wall wash and cove lighting
- Provide upgrade receptacles to be combined with USB port.
- Provide voice/data cabling.
- Provide new LED lighting and wiring to restrooms
- Provide upgraded fire alarm system

Note;

1. The electrical scope will be expanded once the vision and direction is clear from all designers.

2. The cost to prepare bid specifications for the Riviera would be based on the Kehoe-Henry report. Please budget $5,000.00 at this time.

3. We do believe that the electrical budget Kehoe has provide in June of 2017 should be increased by 12% for the upgrades as I know of it now excluding any HVAC upgrades. I think you should add $30k for the HVAC work that is listed in their report until we get direction from your HVAC designer.

Thank you,

John Jrolf

WINCO RESERVES THE RIGHT TO MODIFY OR CHANGE INFORMATION WITHIN THIS BOOK WHEN DEEMED NESSESARY FOR PRODUCT IMPROVEMENT

PERFORMANCE

The Series 3250 window is a thermally broken mainframe and structurally glazed sash that exceeds the performance specification criteria as required by ANSI/AAMA for AW (Architectural Grade) windows.

FIXED	PROJECT OUT - AWNING
AAMA Rating.....AW-80	AAMA Rating.....CW-80
Air Infiltration.....<.1cfm/ft² @ 6.24psf	Air Infiltration.....<.1cfm/ft² @ 6.24psf
Water.....No Leakage @ 12 psf	Water.....No Leakage @ 12 psf
Structural.....+/- 120 psf	Structural.....+/- 120 psf
CRF.....57*	CRF.....54*
U-Value.....33*	U-Value.....46*

SUSPENDED VENT**	CASEMENT
AAMA Rating.....AW-80	AAMA Rating.....CW-80
Air Infiltration.....<.1cfm/ft² @ 6.24psf	Air Infiltration.....<.1cfm/ft² @ 6.24psf
Water.....No Leakage @ 12 psf	Water.....No Leakage @ 12 psf
Structural.....+/- 120 psf	Structural.....+/- 120 psf
CRF.....54*	CRF.....54*
U-Value.....46*	U-Value.....46*

* U-Value and CRF ratings are based on a particular type of glass being used. Performance may when different glazing types are used. Consult your local Winco representative for specific information regarding your project.

** Test size of combination window 63" x 93" with a center vent.

CONSTRUCTION

MATERIAL - The Series 3250 window is a 3 1/4" deep frame depth with a nominal wall thickness of .125 inch. All material is extruded from 6063-T6 alloy The sash and mainframe has an integral extruded beveled face designed for the putty look and application of applied grids.

THERMAL BREAK - All framing members of the window system are thermally broken. Winco uses the Azon Azo Brader process to mechanically condition the surface of the thermal cavity. The process runs the entire length of the extrusion and creates serrations that insure proper adhesion of the structural polymer. The structural urethane is a high density 2 part formula providing optimum thermal performance for the most demanding conditions. The combination of the conditioning of the aluminum surface along with the two part urethane allows Winco to provide a full 10 year warranty against thermal break creep and shrinkage in accordance with AAMA 505-98.

WEATHER-STRIP - All operating ventilators have a triple Santoprene, non-shrinking dual durometer, thermoplastic rubber weather-stripping around the perimeter. One interior and one exterior. And a center weatherstrip for superior water and air performance.

© WINCO WINDOW COMPANY, INC. 2010

FABRICATION - The main frame corners are coped and mechanically joined using two stainless steel spline screws per corner (fig 1). The vent is a hollow tube shaped extrusion for superior strength and rigidity. Vent corners are fully mitered and mechanically joined using two stainless steel spline screws per corner, aligning the members to form a hairline joint (fig 2). All frame joints are back sealed with small joint seam sealer providing a water tight joinery.

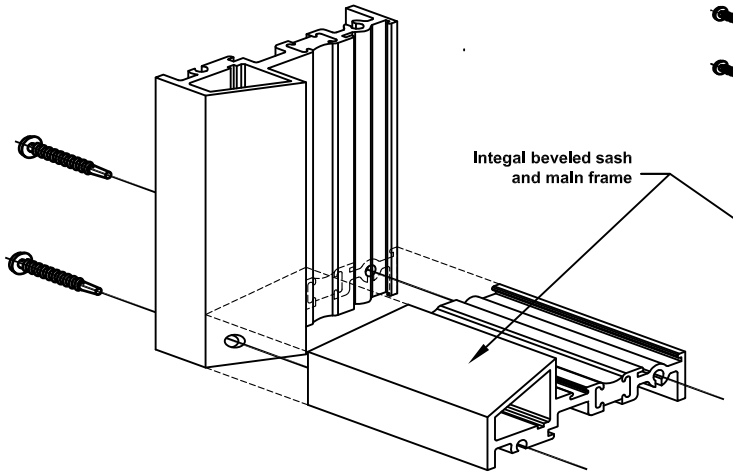

(fig 1)Main Frame Construction

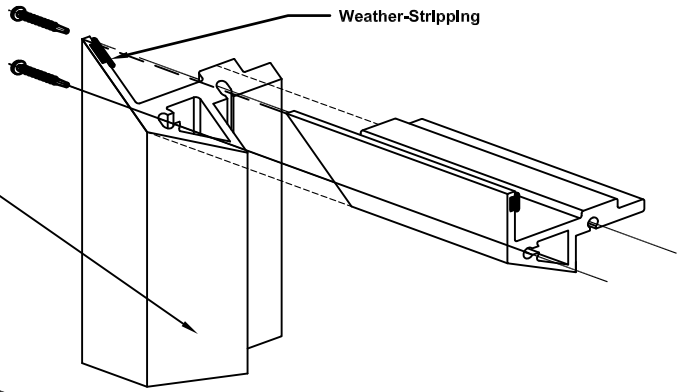

(fig 2) Vent Construction

WINCO RESERVES THE RIGHT TO MODIFY OR CHANGE INFORMATION WITHIN THIS BOOK WHEN DEEMED NESSESARY FOR PRODUCT IMPROVEMENT

GLAZING

The windows can be interior or exterior glazed with .050 thick extruded aluminum glazing beads accommodating thicknesses of 1/4" and 1/2". See the quick reference chart below for all glazing options. For actual details refer to the glazing section in the back of the 3250 section for optional glazing details. The 3250 is ideal and designed for applied grids interior and exterior. For grid options refer to the back of the 3250 section for options.

Glazing Thickness		1/8"	3/16"	1/4"	5/16"	3/8"	1/2"	5/8"	3/4"	7/8"	1"	1 1/4"	1 3/8"	1 1/2"
Mono & Insulated		---	---	~~X~~	---	---	---	---	---	---	X	---	---	---
Dual Glazed	Exterior	---	---	---	---	---	---	---	---	---	---	---	---	---
	Interior	---	---	---	---	---	---	---	---	---	---	---	---	---
Triple Glazed	Exterior	---	---	---	---	---	---	---	---	---	---	---	---	---
	Interior	---	---	---	---	---	---	---	---	---	---	---	---	---

Winco has different gaskets and glazing methods that can accomidate odd thicknesses of glass. If you do not see what you are looking for within this chart please contact your local representative for information regarding your specific project needs.

© WINCO WINDOW COMPANY, INC. 2010

WINCO RESERVES THE RIGHT TO MODIFY OR CHANGE INFORMATION WITHIN THIS BOOK WHEN DEEMED NESSESARY FOR PRODUCT IMPROVEMENT

HARDWARE

All exposed locking hardware, strikes and keepers are solid white bronze alloy with US25D brushed finish. All four bar arms, casement arms, friction arms and key release limit arms are stainless steel conforming to AAMA 904.1. The aluminum pull handle is finished to match the window framing.

Window Type	Butt Hinge	4-Bar Arms	Casement Arms	Friction Adjuster	Roto-Operator	Cam Handles	Pole Ring Cam Handles	Access Control (A/C) Lock	Lift Lock	Pole Ring Lift Lock	Pull Handle	Key Release Limit Arm	Fixed Limit Stop	Under Screen Push Bar
PO - Awning	---	X	---	---	---	---	---	---	X	---	X	---	---	---
Casement Outswing Casement Arms	---	---	X	X	---	---	---	---	X	---	X	---	---	---

X= Standard Hardware
o= Optional Hardware
Note:
1) Not all hardware is compatible with each other, contact your local Winco representative for information
2) Sizelimitatons exist on some hardware, contact your local Winco representative for information

SCREENS

FRAME - frames are fabricarted from 6063-T6 extruded aluminum alloy and temper. All screen frames are miter cut and corner keyed. The corners are mechanically crimped together for durability.

MESH - Standard .011 aluminum screen wire mesh is produced from 5154 alloy with 18x16 pattern in Charcoal or Aluminum color. All mesh is applied to the screen frame with a roller spline making for easy and quick replacements. Optional fiberglass or .009 stainless steel mesh is available as an option.

© WINCO WINDOW COMPANY, INC. 2010

WINCO RESERVES THE RIGHT TO MODIFY OR CHANGE INFORMATION WITHIN THIS BOOK WHEN DEEMED NESSESARY FOR PRODUCT IMPROVEMENT

This page is purposely left blank

© WINCO WINDOW COMPANY, INC. 2010

3250 Series 3-1/4" Thermal Fixed and Projected Windows
Product Details - Fixed - Picture Window

Note: Multiple configurations of this window system are available. Refer to Detail-CD in front of catalog for additional options or contact your local Winco Sales Representative for information

WINCO RESERVES THE RIGHT TO MODIFY OR CHANGE INFORMATION WITHIN THIS BOOK WHEN DEEMED NESSESARY FOR PRODUCT IMPROVEMENT

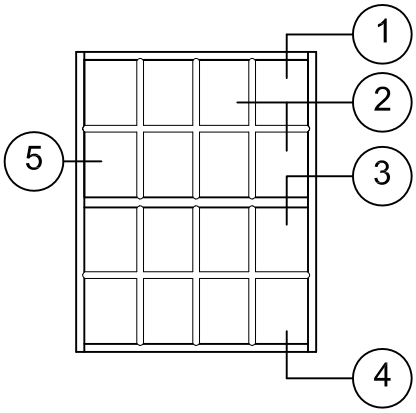

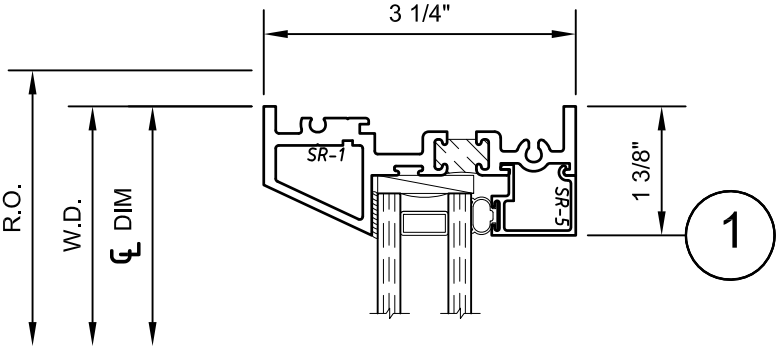

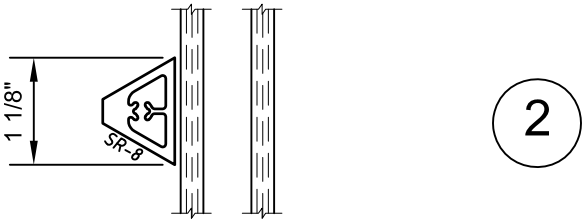

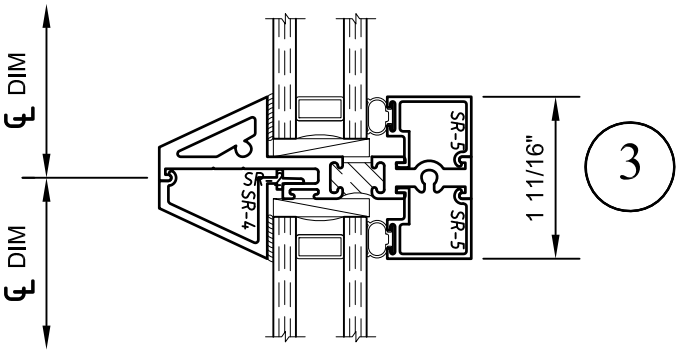

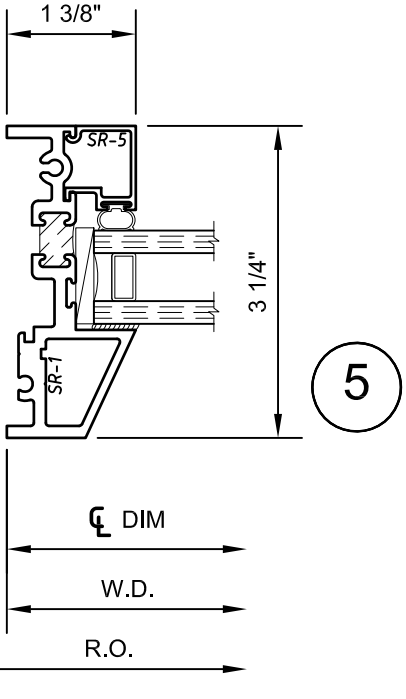

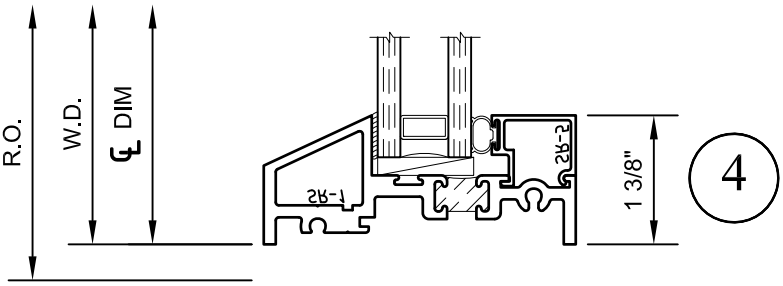

© WINCO WINDOW COMPANY, INC. 2010

SCALE 6"=1'-0"

3250 Series 3-1/4" Thermal Fixed and Projected Windows
Product Details - Project Out - Awning

Note: Multiple configurations of this window system are available. Refer to Detail-CD in front of catalog for additional options or contact your local Winco Sales Representative for information

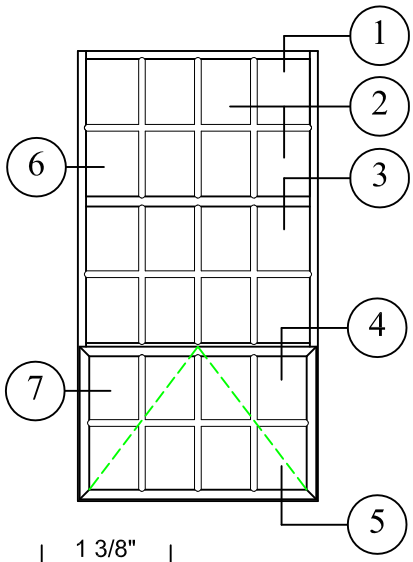

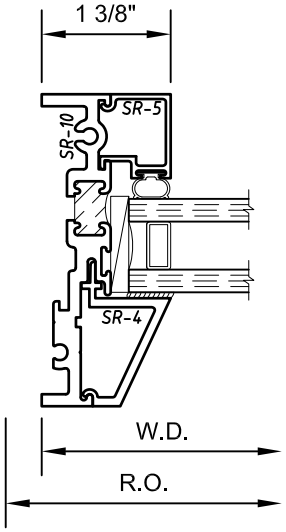

6

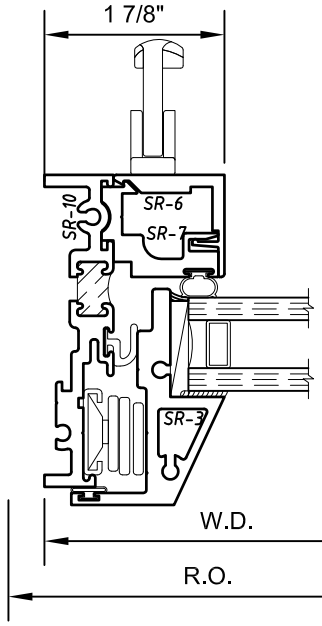

7

SCALE 6"=1'-0"

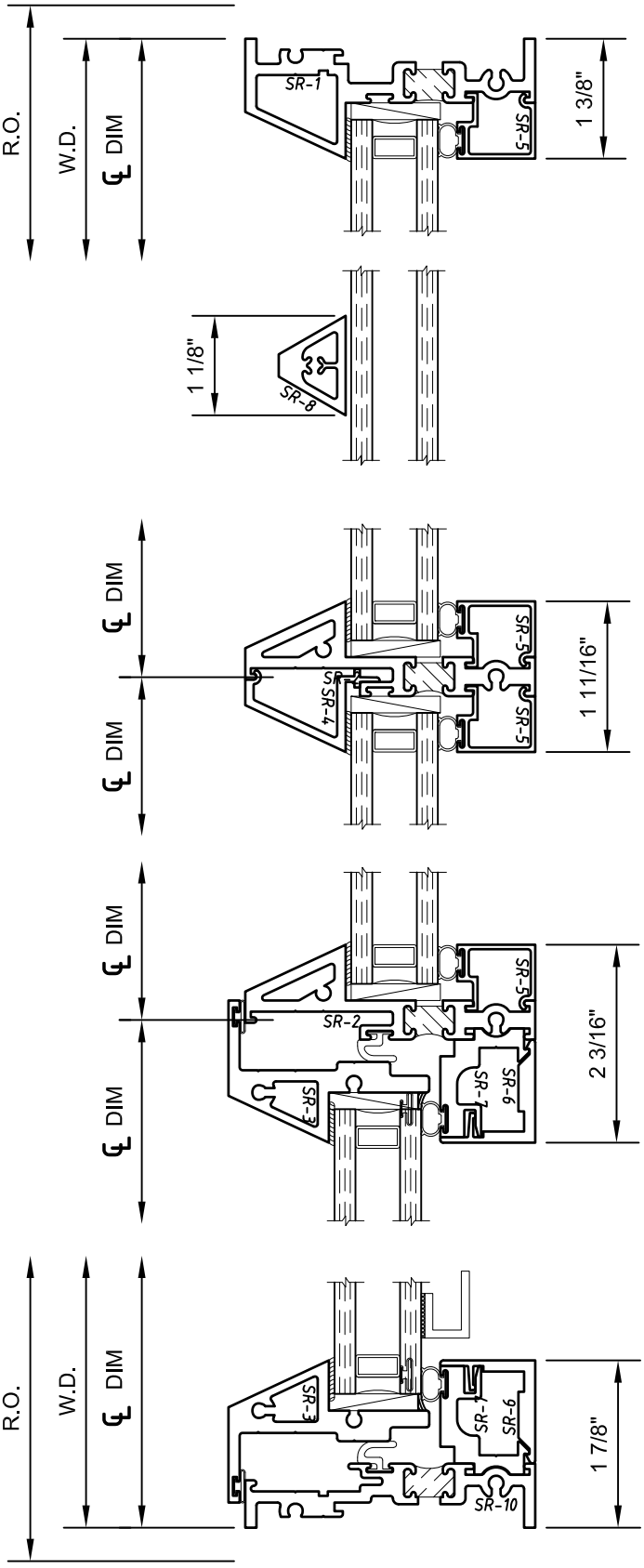

WINCO RESERVES THE RIGHT TO MODIFY OR CHANGE INFORMATION WITHIN THIS BOOK WHEN DEEMED NESSESARY FOR PRODUCT IMPROVEMENT

© WINCO WINDOW COMPANY, INC. 2010

3250 Series 3-1/4" Thermal Fixed and Projected Windows
Product Details - Combination

Note: Multiple configurations of this window system are available. Refer to Detail-CD in front of catalog for additional options or contact your local Winco Sales Representative for information

WINCO RESERVES THE RIGHT TO MODIFY OR CHANGE INFORMATION WITHIN THIS BOOK WHEN DEEMED NESSESARY FOR PRODUCT IMPROVEMENT

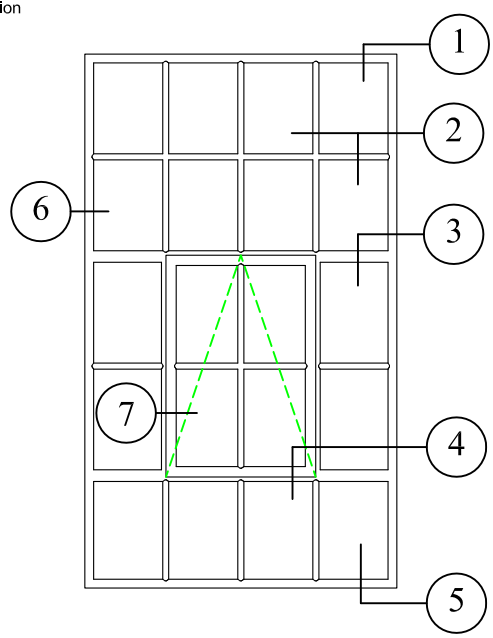

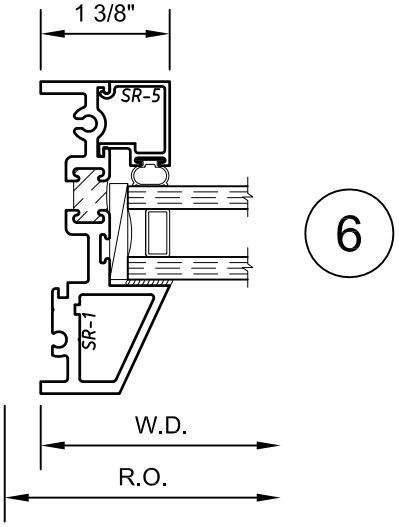

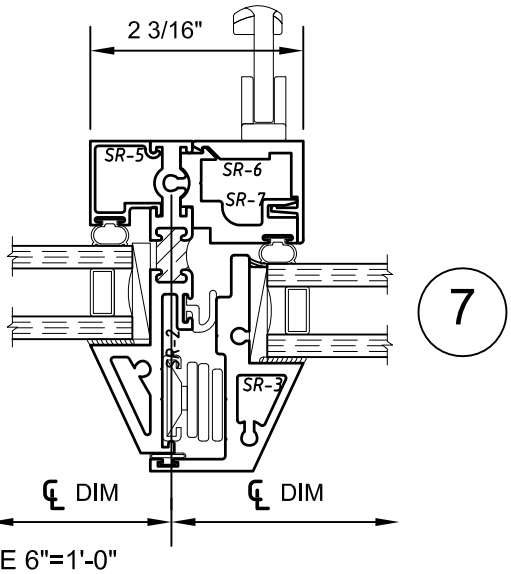

SCALE 6"=1'-0"

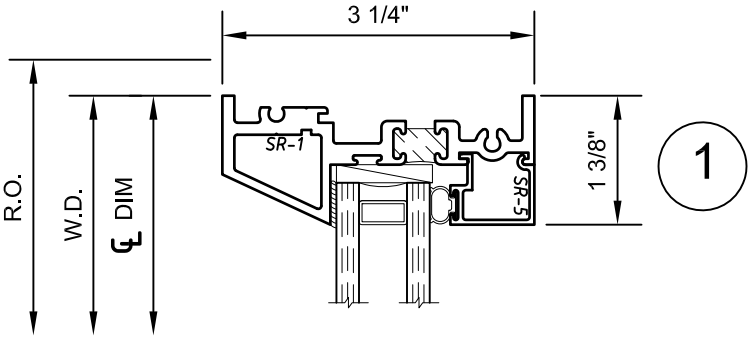

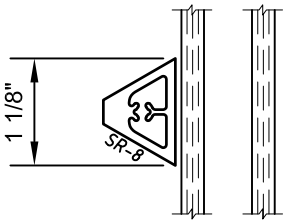

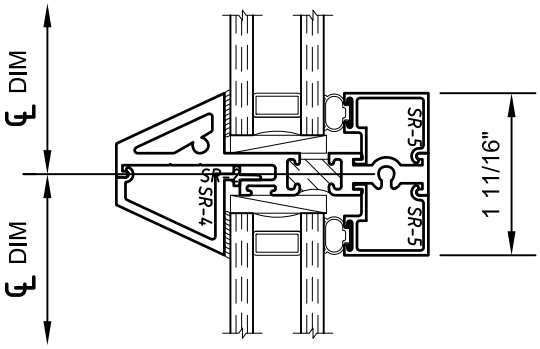

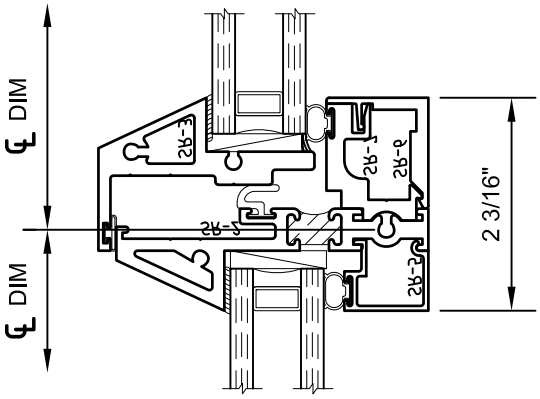

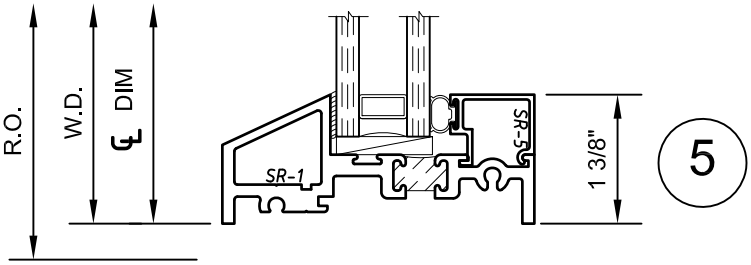

© WINCO WINDOW COMPANY, INC. 2010

3250 Series 3-1/4" Thermal Fixed and Projected Windows
Product Details - PO Casement

Note: Multiple configurations of this window system are available. Refer to Detail-CD in front of catalog for additional options or contact your local Winco Sales Representative for information

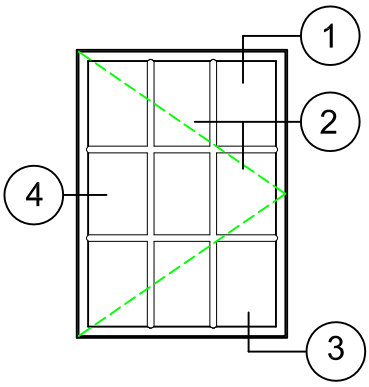

CASEMENT
AVAILABLE IN PO ONLY
4-BAR HINGES ONLY
* WILL NOT MEET EGRESS

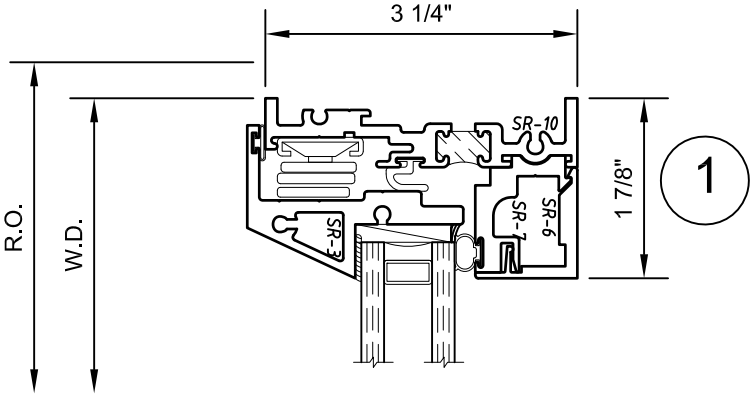

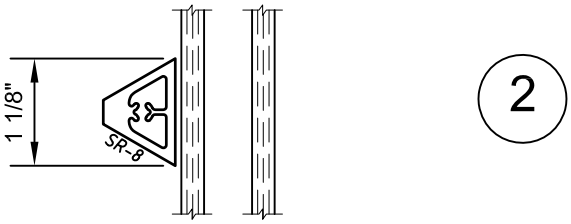

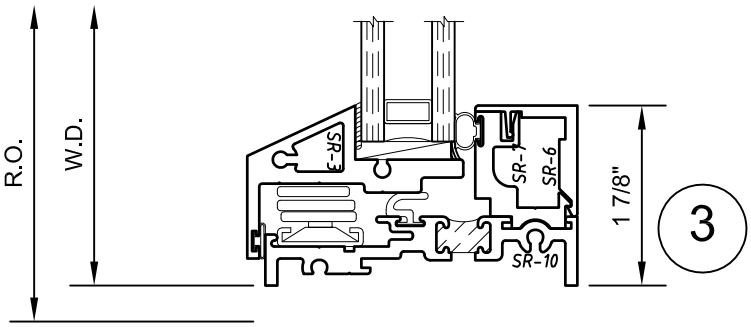

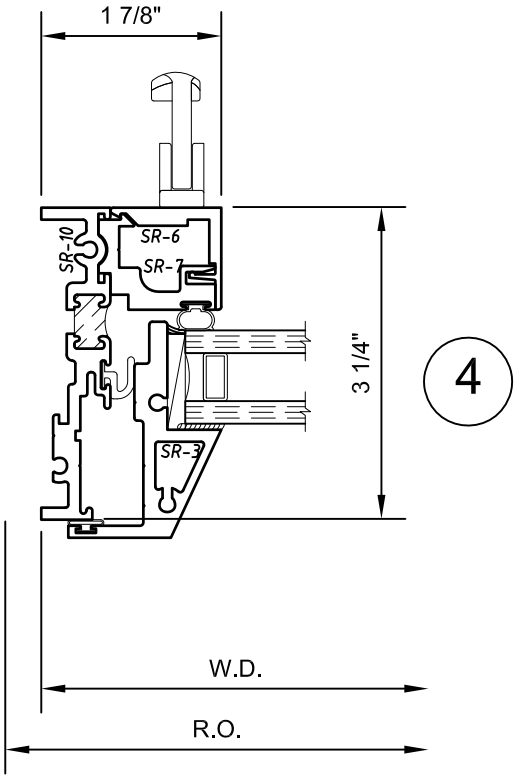

SCALE 6"=1'-0"

WINCO RESERVES THE RIGHT TO MODIFY OR CHANGE INFORMATION WITHIN THIS BOOK WHEN DEEMED NESSESARY FOR PRODUCT IMPROVEMENT

© WINCO WINDOW COMPANY, INC. 2010

3250 Series 3-1/4" Thermal Fixed and Projected Windows
Product Details - PO Butterfly Casement

Note: Multiple configurations of this window system are available. Refer to Detail-CD in front of catalog for additional options or contact your local Winco Sales Representative for information

WINCO RESERVES THE RIGHT TO MODIFY OR CHANGE INFORMATION WITHIN THIS BOOK WHEN DEEMED NESSESARY FOR PRODUCT IMPROVEMENT

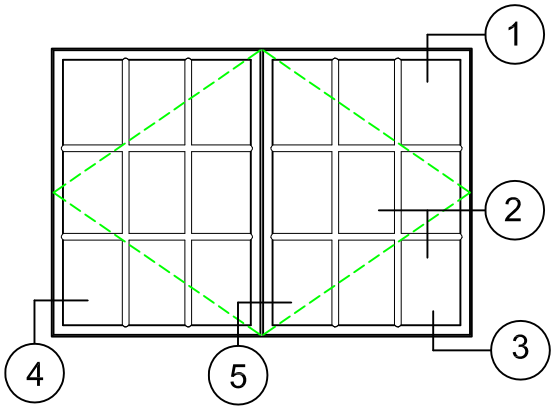

BUTTERFLY CASEMENT
AVAILABLE IN PO ONLY
4-BAR HINGES ONLY
* WILL NOT MEET EGRESS

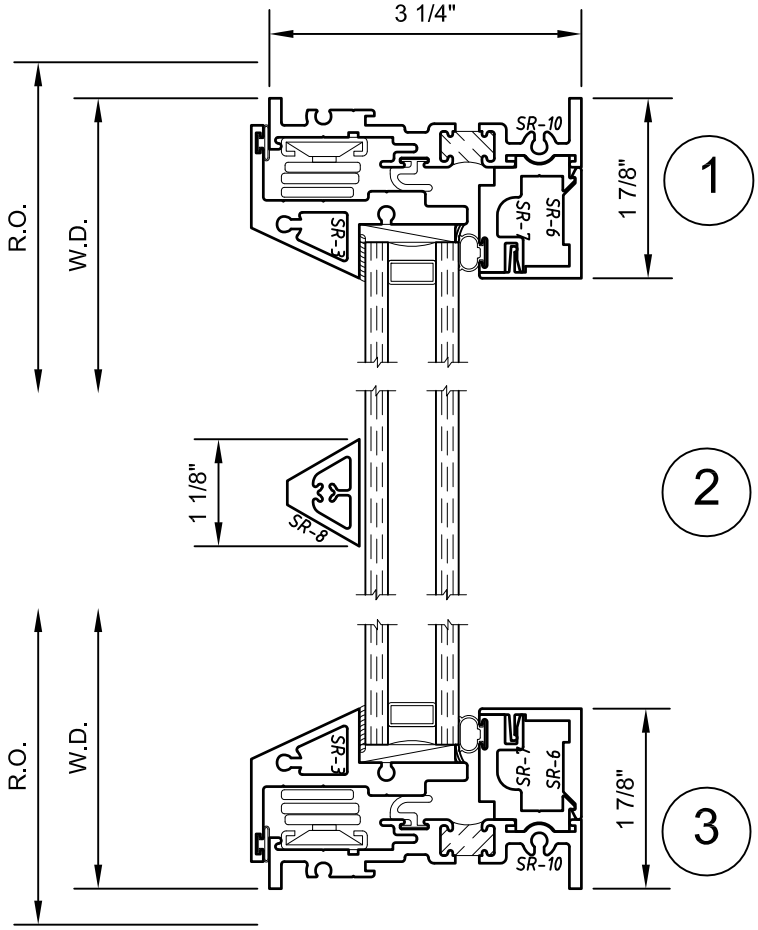

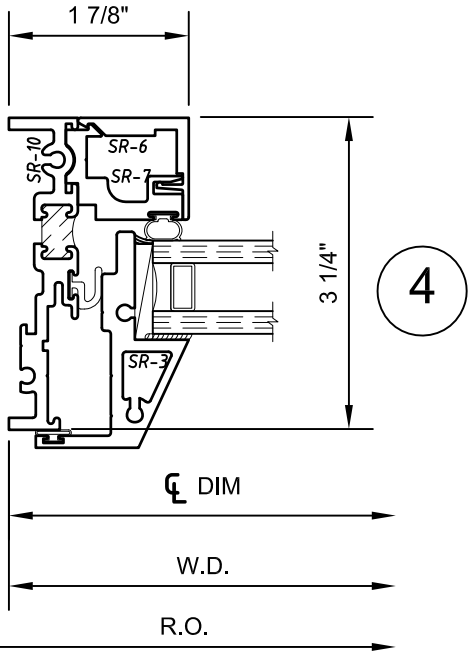

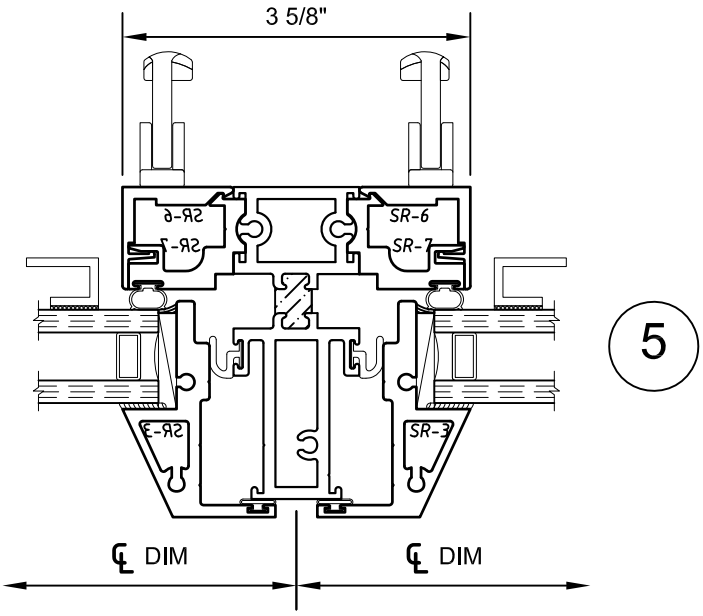

SCALE 6"=1'-0"

WINCO WINDOW COMPANY, INC. 2010

3250 Series 3-1/4" Thermal Fixed and Projected Windows
Product Details - PO Butterfly Casement over PO vent

Note: Multiple configurations of this window system are available. Refer to Detail-CD in front of catalog for additional options or contact your local Winco Sales Representative for information

WINCO RESERVES THE RIGHT TO MODIFY OR CHANGE INFORMATION WITHIN THIS BOOK WHEN DEEMED NESSESARY FOR PRODUCT IMPROVEMENT

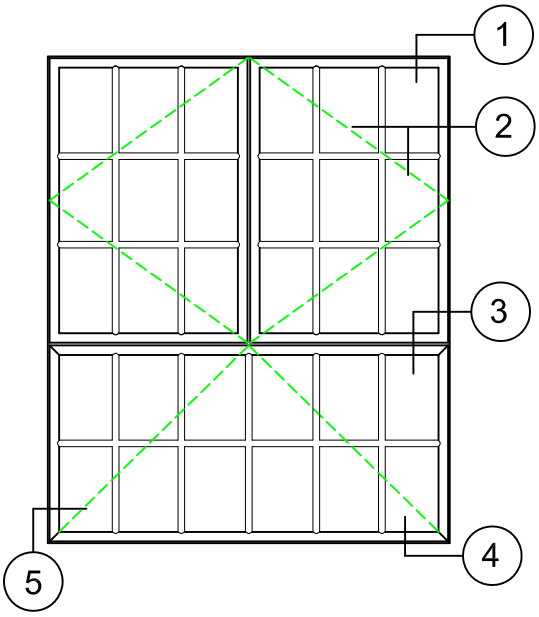

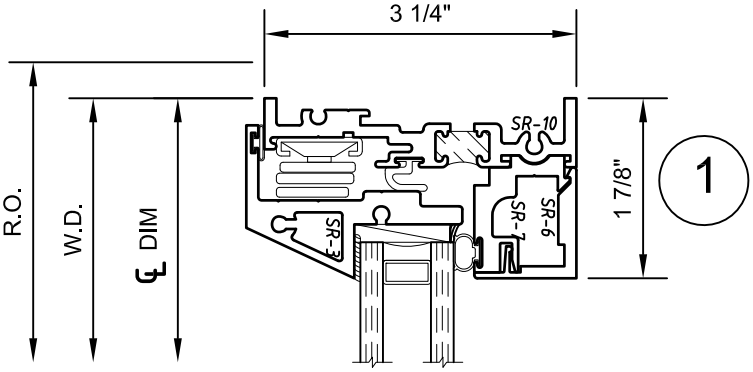

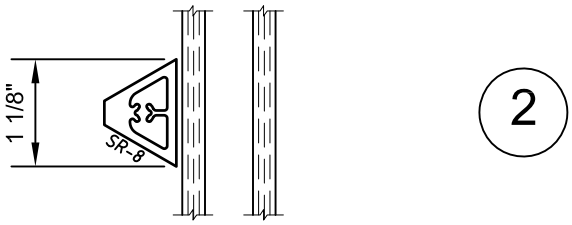

BUTTERFLY CASEMENT / PO VENT
AVAILABLE IN PO ONLY
4-BAR HINGES ONLY
* WILL NOT MEET EGRESS

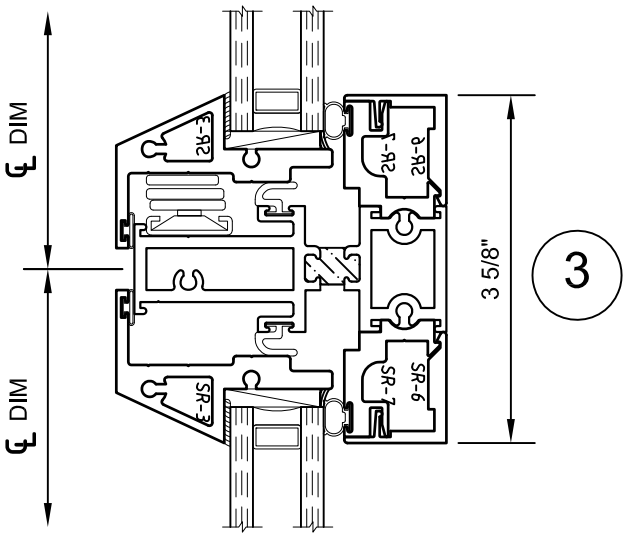

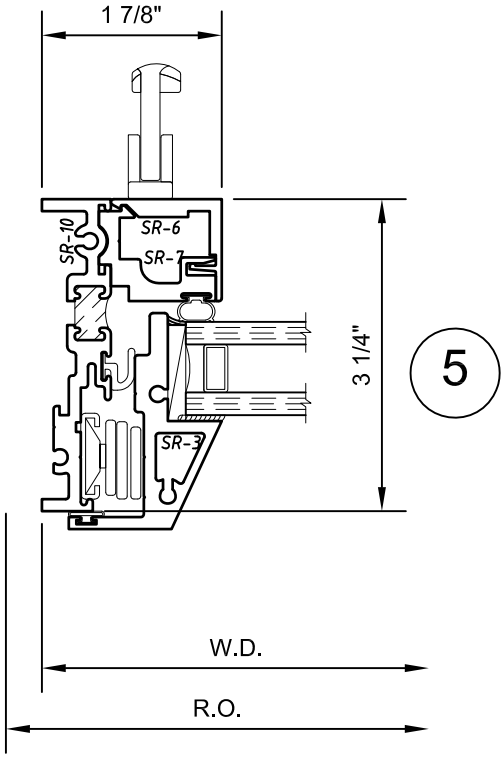

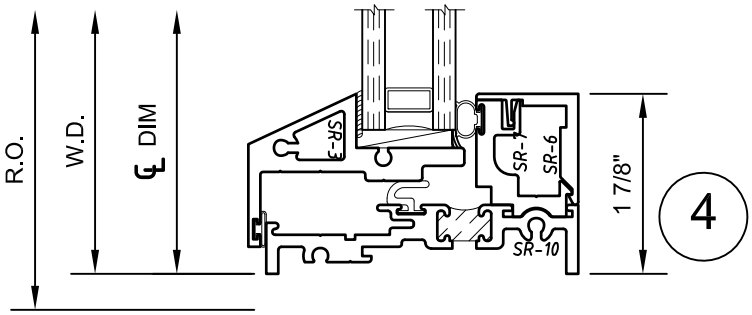

SCALE 6"=1'-0"

WINCO WINDOW COMPANY, INC. 2010

3250 Series 3-1/4" Thermal Fixed and Projected Windows
Product Details - Frame Options

Note: Multiple configurations of this window system are available. Refer to Detail-CD in front of catalog for additional options or contact your local Winco Sales Representative for information

WINCO RESERVES THE RIGHT TO MODIFY OR CHANGE INFORMATION WITHIN THIS BOOK WHEN DEEMED NESSESARY FOR PRODUCT IMPROVEMENT

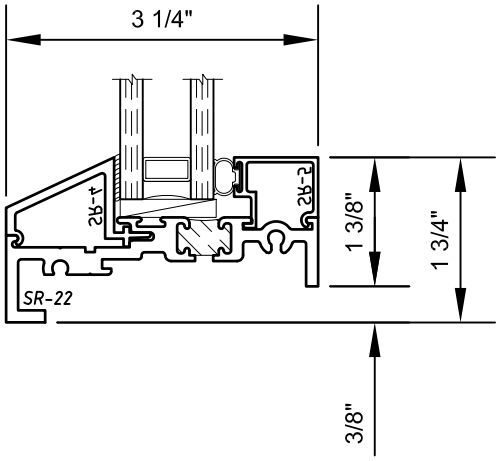

Available at head, jamb, and sill

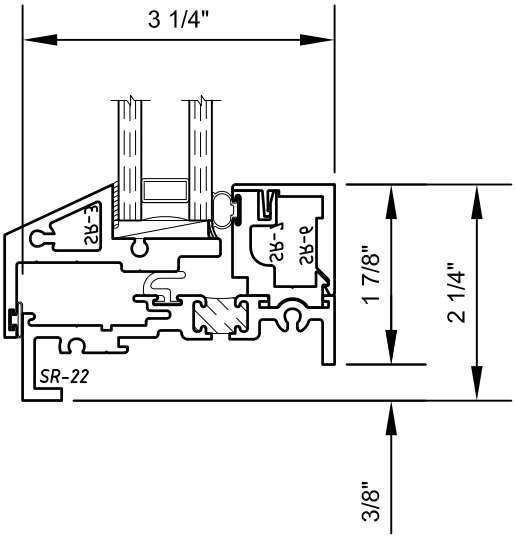

Available at head, jamb, and sill

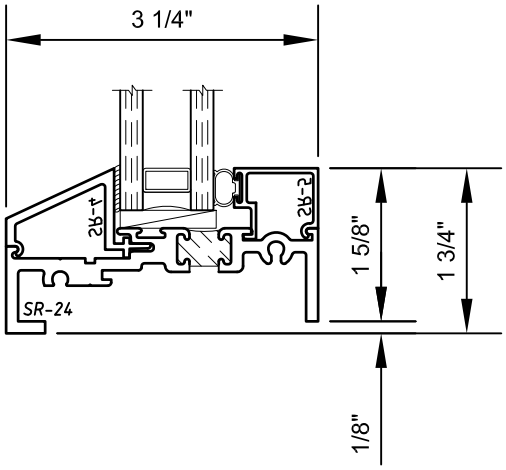

Available at head, jamb, and sill

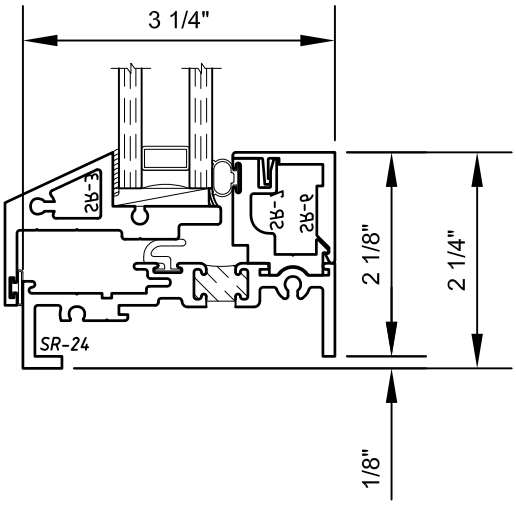

Available at head, jamb, and sill

© WINCO WINDOW COMPANY, INC. 2010

SCALE 6"=1'-0"

3250 Series 3-1/4" Thermal Fixed and Projected Windows
Product Details - Rail Options

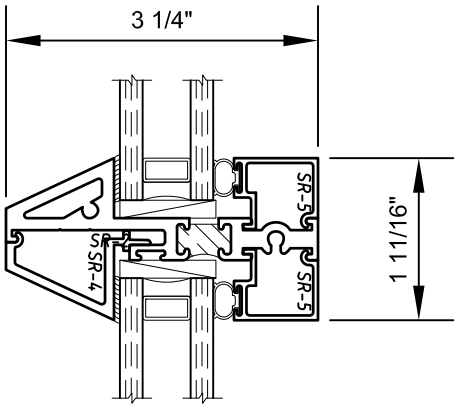

Standard Rail

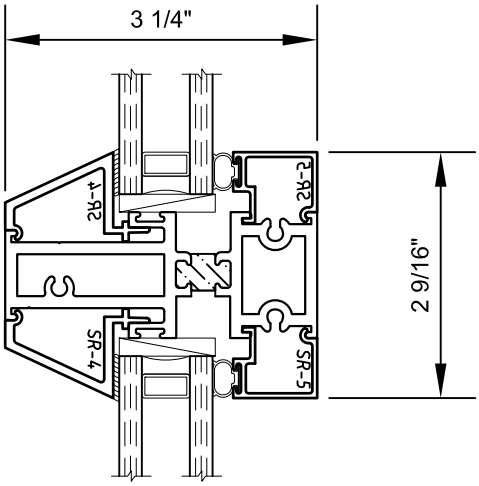

Heavy Duty Rail

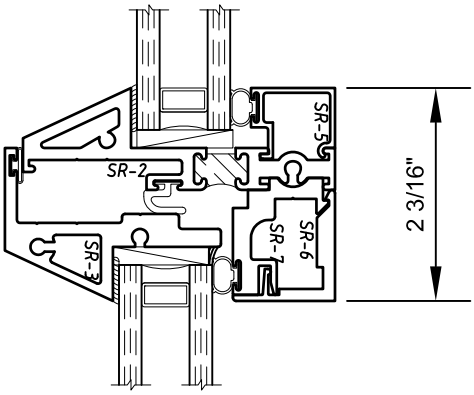

Standard Rail

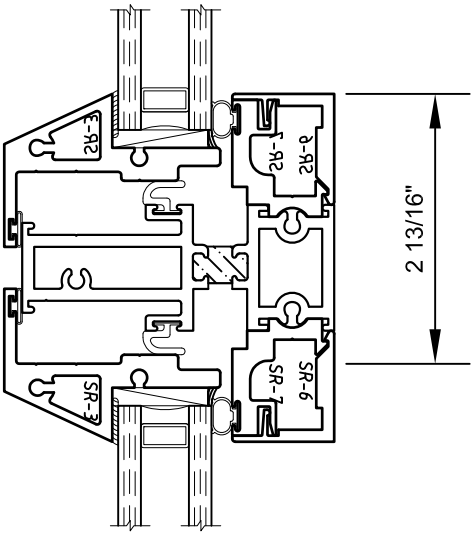

Heavy Duty Rail

WINCO RESERVES THE RIGHT TO MODIFY OR CHANGE INFORMATION WITHIN THIS BOOK WHEN DEEMED NESSESARY FOR PRODUCT IMPROVEMENT

© WINCO WINDOW COMPANY, INC. 2010

3250 Series 3-1/4" Thermal Fixed and Projected Windows
Product Details - Glazing Options

WINCO RESERVES THE RIGHT TO MODIFY OR CHANGE INFORMATION WITHIN THIS BOOK WHEN DEEMED NESSESARY FOR PRODUCT IMPROVEMENT

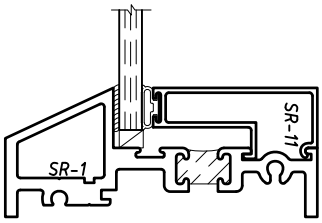

1/4" Glazing Bead
SR-11

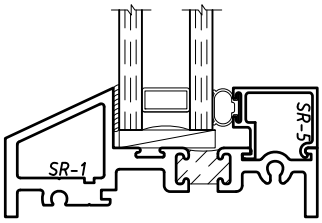

1" Glazing Bead
SR-5

© WINCO WINDOW COMPANY, INC. 2010

SCALE 6"=1'-0"

3250 Series 3-1/4" Thermal Fixed and Projected Windows
Product Details - Applied Grid Options

WINCO RESERVES THE RIGHT TO MODIFY OR CHANGE INFORMATION WITHIN THIS BOOK WHEN DEEMED NESSESARY FOR PRODUCT IMPROVEMENT

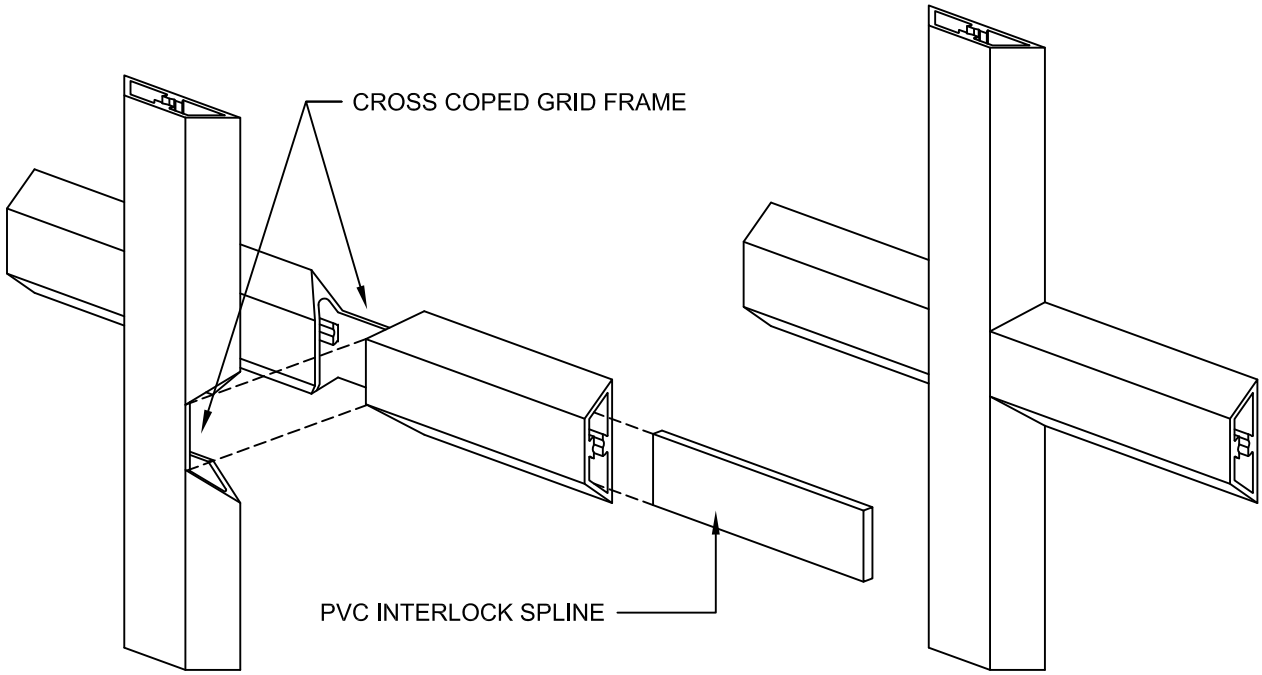

Winco applied grids are cross coped to interlock and connected with a pvc spline interlocking them together. to provide tight fitting joinery and strength to help eliminate bowing or sagging grids. Round top applications will be done with the convetional pinned method.

EXTERIOR APPLIED GRID OPTIONS

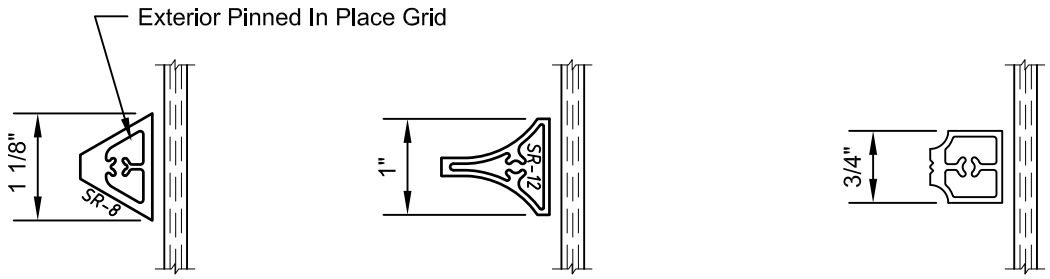

SR-8 SR-12 SR-20

SIMULATED DIVIDED LIGHT OPTION

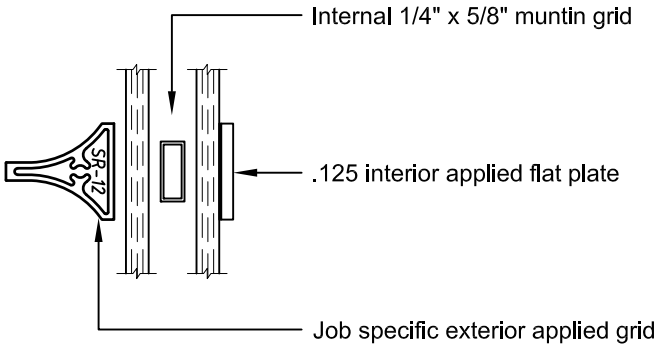

SCALE 6"=1'-0"

© WINCO WINDOW COMPANY, INC. 2010

3250 Series 3-1/4" Thermal Fixed and Projected Windows
Product Details - False Vent

WINCO RESERVES THE RIGHT TO MODIFY OR CHANGE INFORMATION WITHIN THIS BOOK WHEN DEEMED NESSESARY FOR PRODUCT IMPROVEMENT

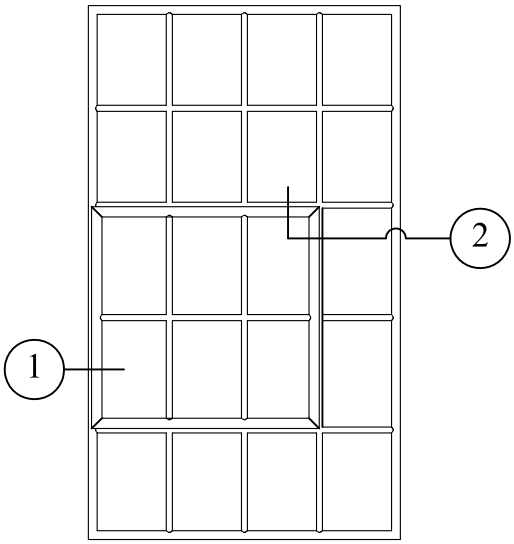

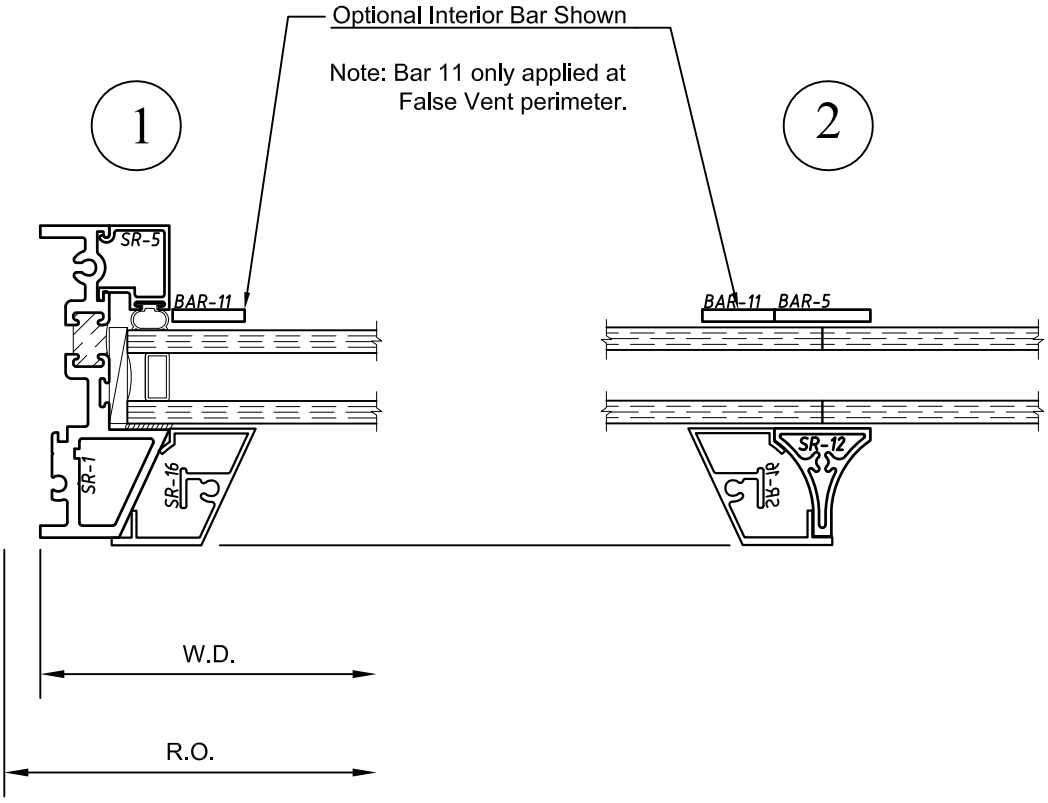

© WINCO WINDOW COMPANY, INC. 2010

SCALE 6"=1'-0"

Note: Multiple configurations of this window system are available. Refer to Detail-CD in front of catalog for additional options or contact your local Winco Sales Representative for information

WINCO RESERVES THE RIGHT TO MODIFY OR CHANGE INFORMATION WITHIN THIS BOOK WHEN DEEMED NESSESARY FOR PRODUCT IMPROVEMENT

THIS PAGE LEFT BLANK

© WINCO WINDOW COMPANY, INC. 2010

3250 Series 3-1/4" Thermal Fixed and Projected Windows
Product Details - Screen Options - PO - Awning

Note: Typical vent screen details shown. Winco reserves the right to alter the screen attachment detail due to job specific sizing and hardware. If you have specific screen applications you would like to see please contact your local Winco Sales Representative for more information.

WINCO RESERVES THE RIGHT TO MODIFY OR CHANGE INFORMATION WITHIN THIS BOOK WHEN DEEMED NESSESARY FOR PRODUCT IMPROVEMENT

Note: Dashed lines on screen elevations depict operable sash type. All screen frames are fixed

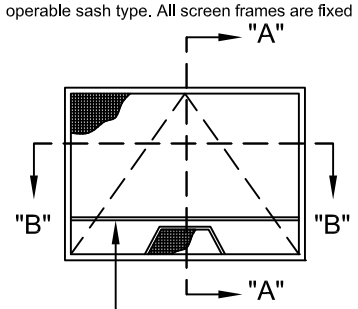

Section "A" - "A"

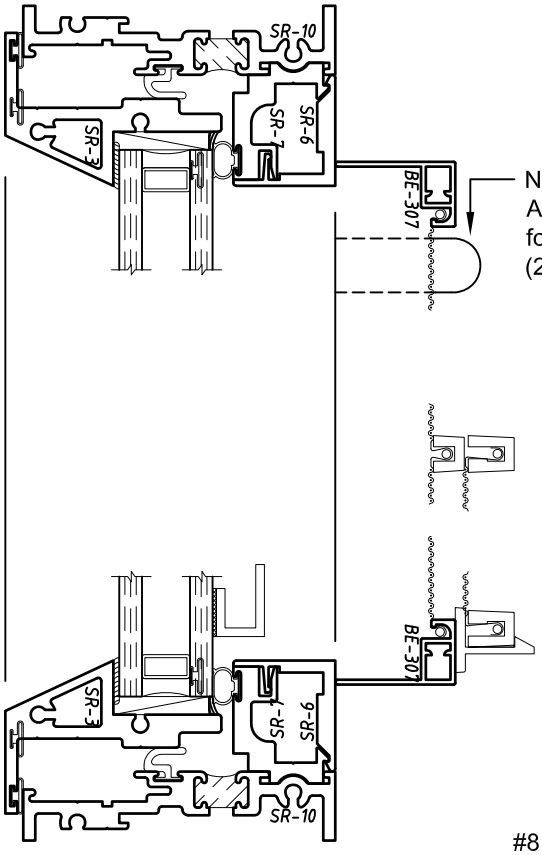

Note:
All screens will have
four H500-29 screen clips
(2) per side

Optional D8-90 Muntin Bar

Winco reserves the right to add the D8-90 muntin bar to any aluminum mesh screen for wicket support if the vent becomes too wide. All Fiberglass screnn mesh will receive the support rail regardless of width.

Top hinged Wicket
(1) per cam lock

#8 X 1 5/8" Fastener

H500-29 Screen Clip

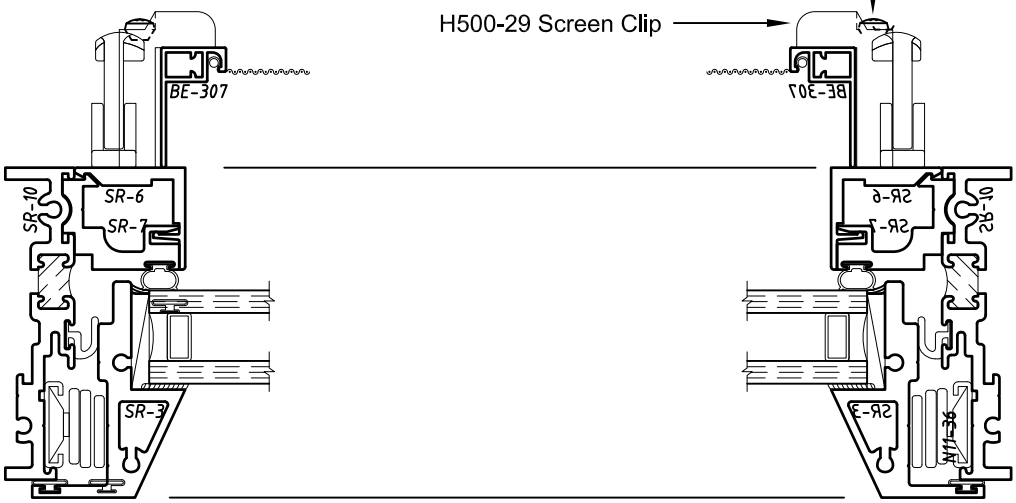

Section "B" - "B"

SCALE 6"=1'-0"

© WINCO WINDOW COMPANY, INC. 2010

Note: Multiple configurations of this window system are available. Refer to Detail-CD in front of catalog for additional options or contact your local Winco Sales Representative for information

WINCO RESERVES THE RIGHT TO MODIFY OR CHANGE INFORMATION WITHIN THIS BOOK WHEN DEEMED NESSESARY FOR PRODUCT IMPROVEMENT

THIS PAGE LEFT BLANK

© WINCO WINDOW COMPANY, INC. 2010

Note: Multiple configurations of this window system are available. Refer to Detail-CD in front of catalog for additional options or contact your local Winco Sales Representative for information

WINCO RESERVES THE RIGHT TO MODIFY OR CHANGE INFORMATION WITHIN THIS BOOK WHEN DEEMED NESSESARY FOR PRODUCT IMPROVEMENT

Projected Out Awning with 4-Bar Hinges

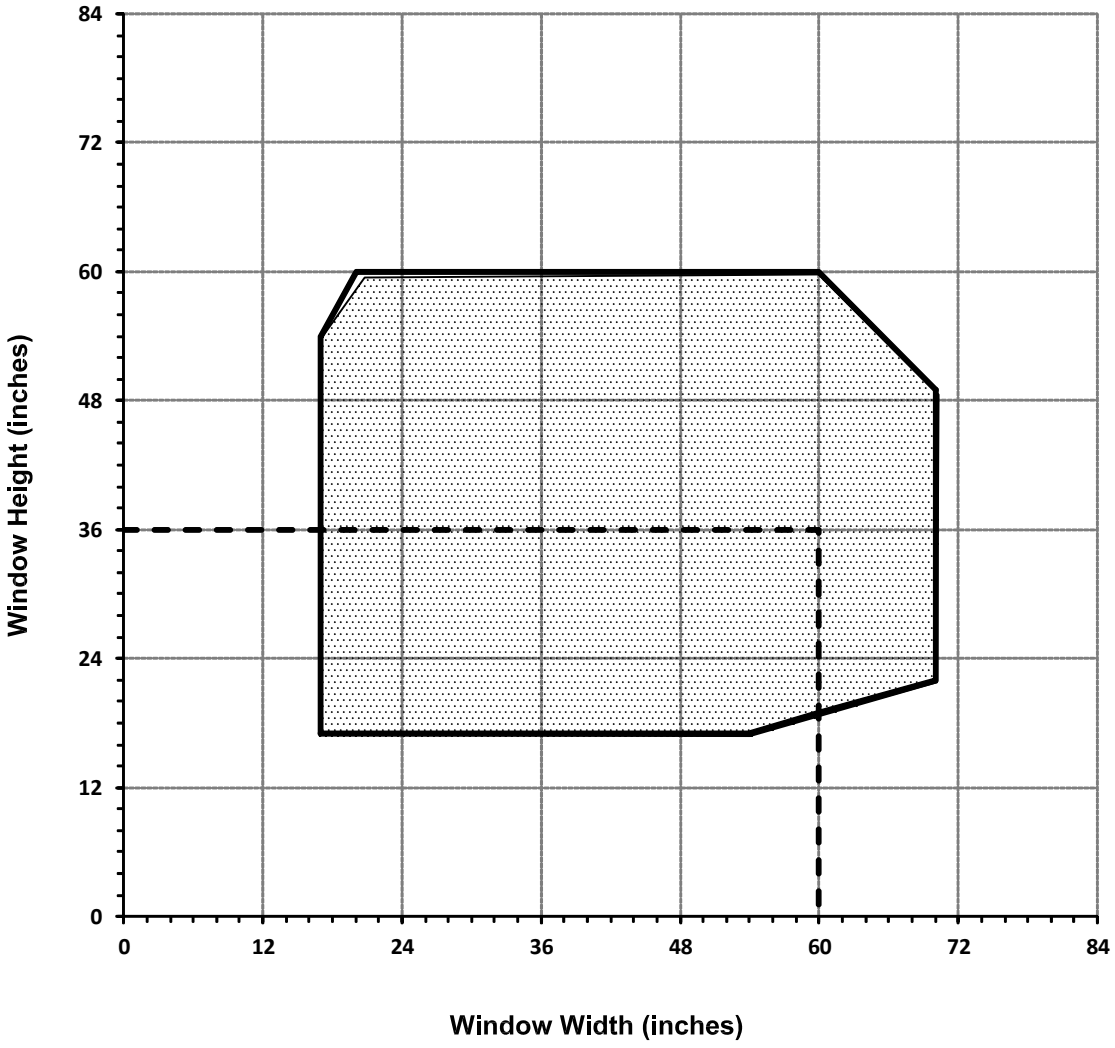

- - - - AAMA Gateway Size

- Dashed line represents the gateway size window as tested by AAMA.
- All vent sizes are based upon 1" Insulated glass consisting of ¼ glass -½ air -¼ glass.
- Any vent size outside of the AAMA Gateway tested size may have reduced performance.
- Chart assumes the window has been installed in a properly prepared opening by a qualified installer.
- Individual job criteria such as: other glazing materials, specified wind load, and specific operating hardware; may enhance or restrict the chart.
- Minimum vent size is 14" x 14" with standard cam handles and 4-bar hinges.
- The chart is a general guideline for projected vent sizing, anything on the edge or outside of the range will need to be reviewed by Winco Engineering.

© WINCO WINDOW COMPANY, INC. 2010

Note: Multiple configurations of this window system are available. Refer to Detail-CD in front of catalog for additional options or contact your local Winco Sales Representative for information

WINCO RESERVES THE RIGHT TO MODIFY OR CHANGE INFORMATION WITHIN THIS BOOK WHEN DEEMED NESSESARY FOR PRODUCT IMPROVEMENT

Projected Out Casement with 4-Bar Hinges

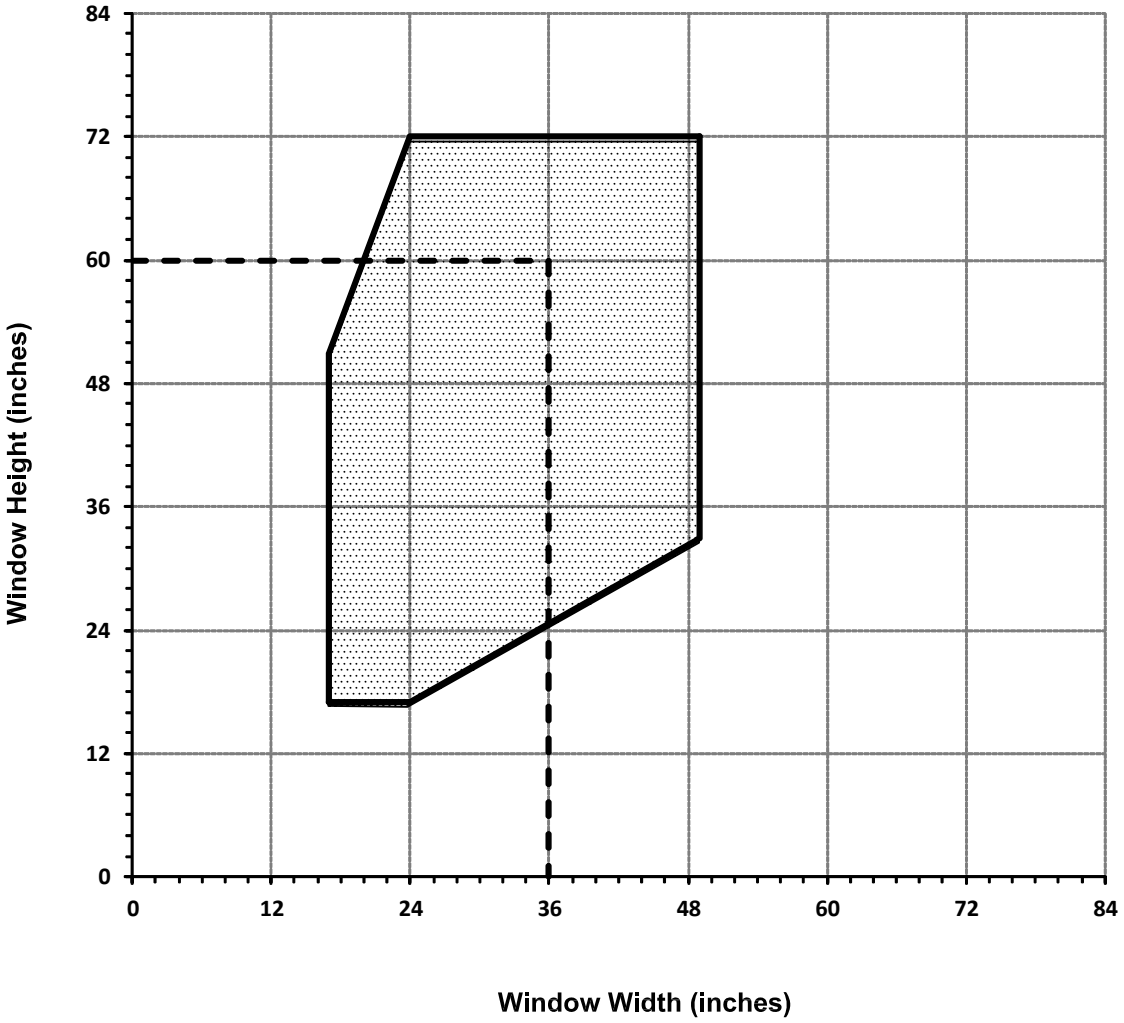

- - - - AAMA Gateway Size

- Dashed line represents the gateway size window as tested by AAMA.
- All vent sizes are based upon 1" Insulated glass consisting of ¼ glass -½ air -¼ glass.
- Any vent size outside of the AAMA Gateway tested size may have reduced performance.
- Chart assumes the window has been installed in a properly prepared opening by a qualified installer.
- Individual job criteria such as: other glazing materials, specified wind load, and specific operating hardware; may enhance or restrict the chart.
- Minimum vent size is 14" x 14" with standard cam handles and 4-bar hinges.
- The chart is a general guideline for projected vent sizing, anything on the edge or outside of the range will need to be reviewed by Winco Engineering.

© WINCO WINDOW COMPANY, INC. 2010

3250 Series 3-1/4" Thermal Fixed and Projected Windows
Product Details - Mullion Stack SR-1/SR-40/SR-1

Note: Multiple configurations of this window system are available. Refer to Detail-CD in front of catalog for additional options or contact your local Winco Sales Representative for information

WINCO RESERVES THE RIGHT TO MODIFY OR CHANGE INFORMATION WITHIN THIS BOOK WHEN DEEMED NESSESARY FOR PRODUCT IMPROVEMENT

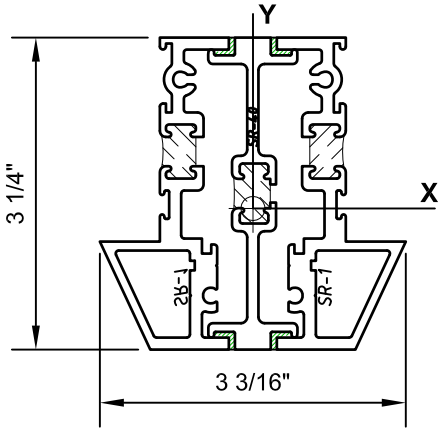

Combined Properties

	X-X	Y-Y
I	2.8462 in^4	1.3123 in^4
S	1.5984 in^3	0.8229 in^3

Wind Load Chart

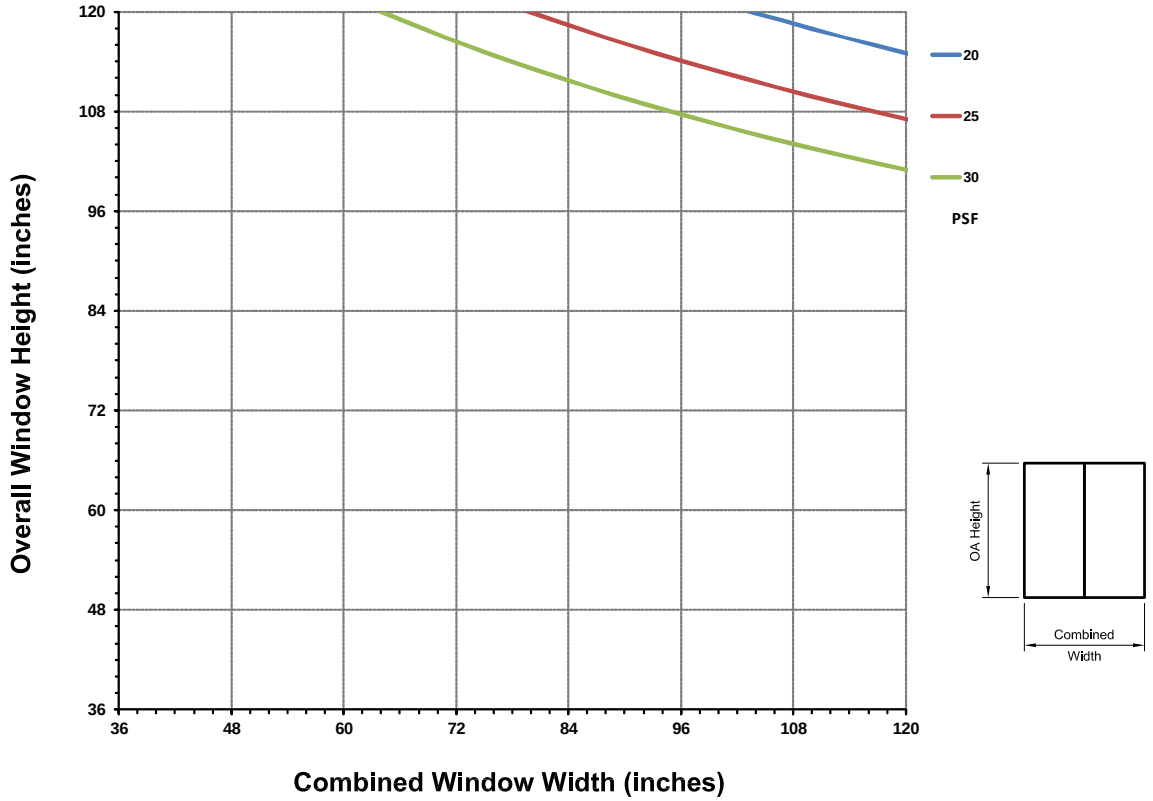

This chart can be used as a guideline for the preliminary structural evaluation of the mullion/stack shown. The chart is based on conservative engineering practices and the minimum result from either L/175 Deflection, ¾" deflection, or 15 ksi outer fiber stress. The chart reflects the structural strength of 2 continuous window jambs and 1 common mullion running the full height of the opening. WINCO highly recommends consulting an engineer for any of the following circumstances:

- The window under consideration falls close too or on the design pressure line.
- Any rail exceeds 48" with a large (>16ft²) light of glass above.
- Any vent width exceeds 60".
- Window exceeds the maximum size shown.
- Window has multiple rails (>3).

© WINCO WINDOW COMPANY, INC. 2010

3250 Series 3-1/4" Thermal Fixed and Projected Windows
Product Details - Mullion Stack SR-40

Note: Multiple configurations of this window system are available. Refer to Detail-CD in front of catalog for additional options or contact your local Winco Sales Representative for information

WINCO RESERVES THE RIGHT TO MODIFY OR CHANGE INFORMATION WITHIN THIS BOOK WHEN DEEMED NESSESARY FOR PRODUCT IMPROVEMENT

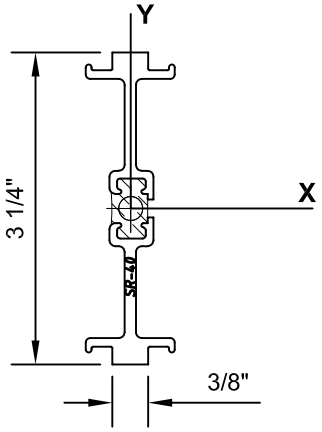

Combined Properties

	X-X	Y-Y
I	0.8831 in^4	0.0193 in^4
S	0.5434 in^3	0.0412 in^3

Wind Load Chart

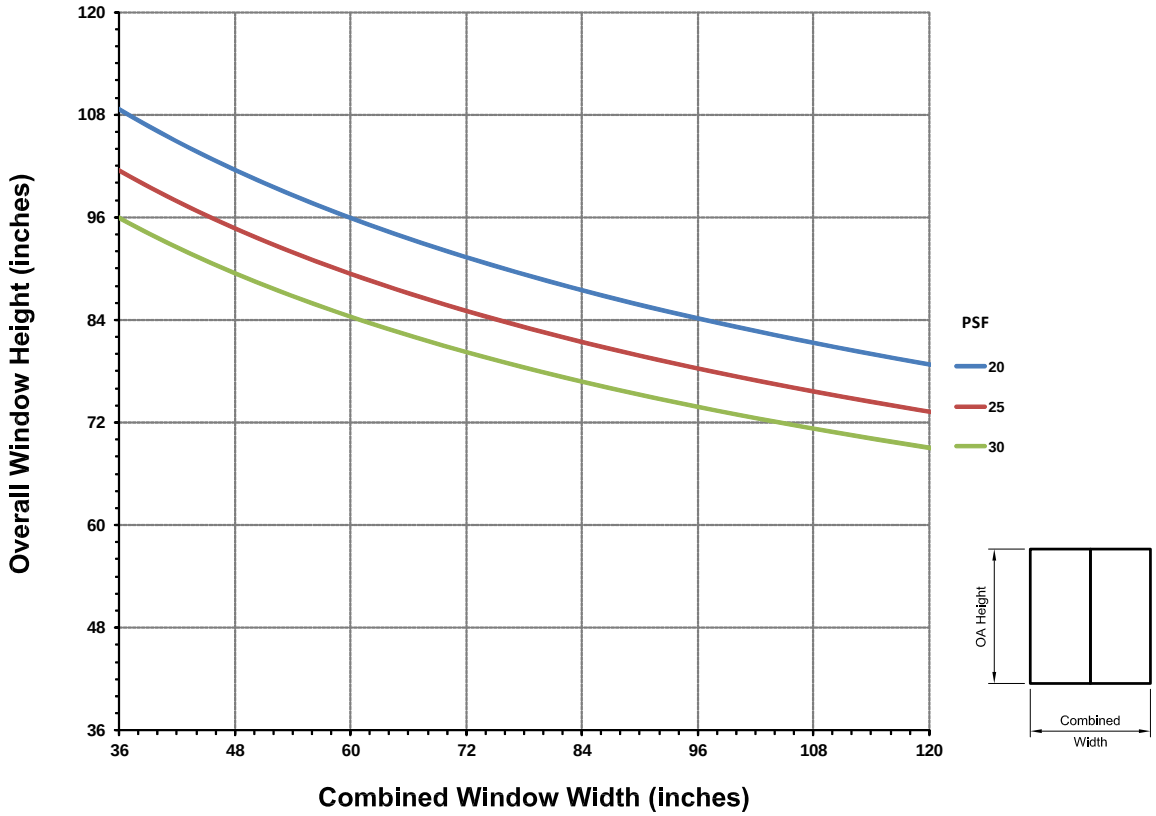

This chart can be used as a guideline for the preliminary structural evaluation of the mullion/stack shown. The chart is based on conservative engineering practices and the minimum result from either L/175 Deflection, ¾" deflection, or 15 ksi outer fiber stress. The chart reflects the structural strength of only the mullion running the full height of the opening. WINCO highly recommends consulting an engineer for any of the following circumstances:

- The window under consideration falls close too or on the design pressure line.
- Any rail exceeds 48" with a large (>16ft²) light of glass above.
- Any vent width exceeds 60".
- Window exceeds the maximum size shown.
- Window has multiple rails (>3).

© WINCO WINDOW COMPANY, INC. 2010

3250 Series 3-1/4" Thermal Fixed and Projected Windows
Product Details - Mullion Stack SR-10/SR-40/SR-10

Note: Multiple configurations of this window system are available. Refer to Detail-CD in front of catalog for additional options or contact your local Winco Sales Representative for information

WINCO RESERVES THE RIGHT TO MODIFY OR CHANGE INFORMATION WITHIN THIS BOOK WHEN DEEMED NESSESARY FOR PRODUCT IMPROVEMENT

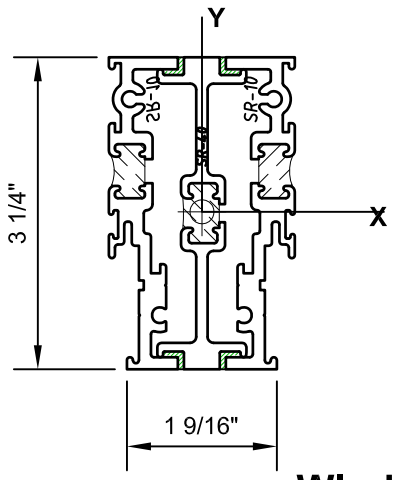

Combined Properties

	X-X	Y-Y
I	2.4236 in^4	0.6975 in^4
S	1.4781 in^3	0.7191 in^3

Wind Load Chart

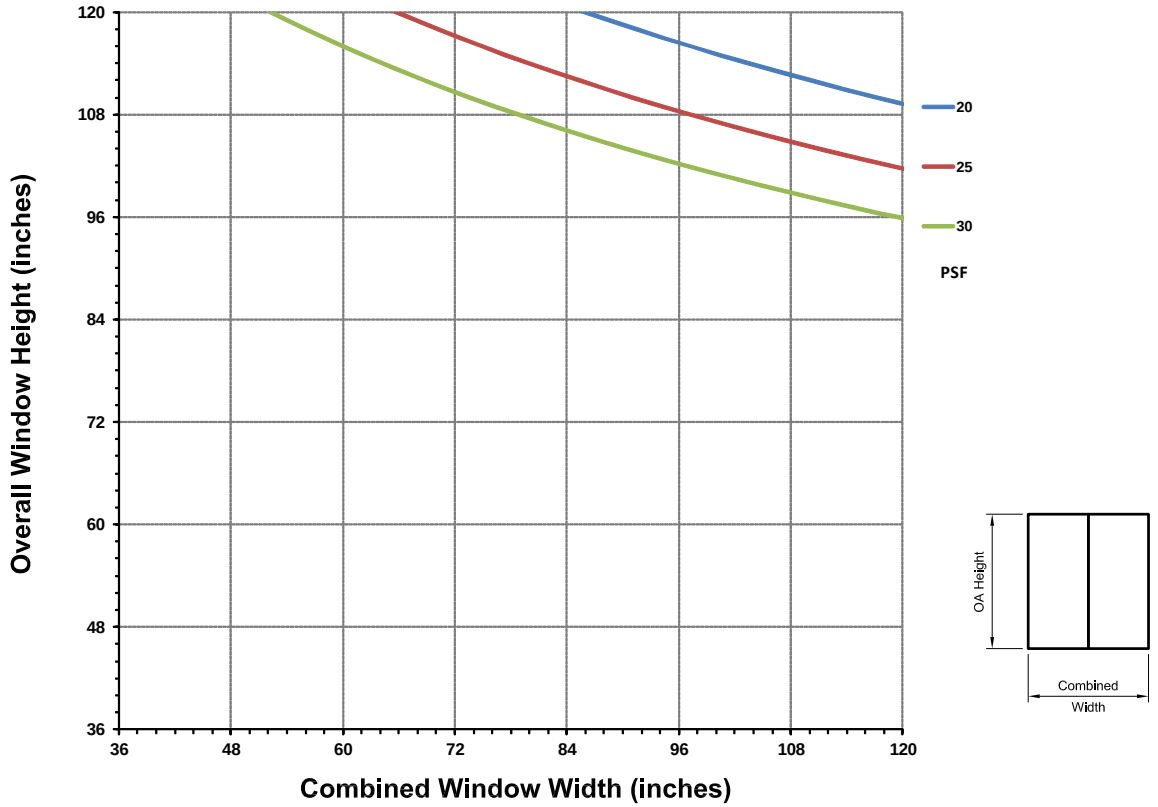

This chart can be used as a guideline for the preliminary structural evaluation of the mullion/stack shown. The chart is based on conservative engineering practices and the minimum result from either L/175 Deflection, ¾" deflection, or 15 ksi outer fiber stress. The chart reflects the structural strength of 2 continuous window jambs and 1 common mullion running the full height of the opening. WINCO highly recommends consulting an engineer for any of the following circumstances:

- The window under consideration falls close too or on the design pressure line.
- Any rail exceeds 48" with a large (>16ft²) light of glass above.
- Any vent width exceeds 60".
- Window exceeds the maximum size shown.
- Window has multiple rails (>3).

© WINCO WINDOW COMPANY, INC. 2010

3250 Series 3-1/4" Thermal Fixed and Projected Windows
Product Details - Reinforced Mullion SR-40 / SR-14

Note: Multiple configurations of this window system are available. Refer to Detail-CD in front of catalog for additional options or contact your local Winco Sales Representative for information

WINCO RESERVES THE RIGHT TO MODIFY OR CHANGE INFORMATION WITHIN THIS BOOK WHEN DEEMED NESSESARY FOR PRODUCT IMPROVEMENT

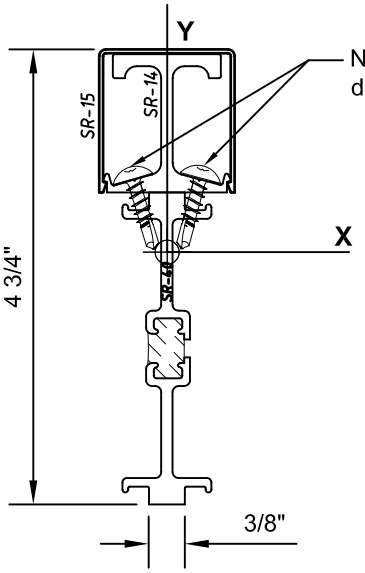

Note: Engineering required to determine spacing of shear anchors

Combined Properties

	X-X	Y-Y
I	2.6580 in^4	0.0651 in^4
S	1.0116 in^3	0.0972 in^3

Wind Load Chart

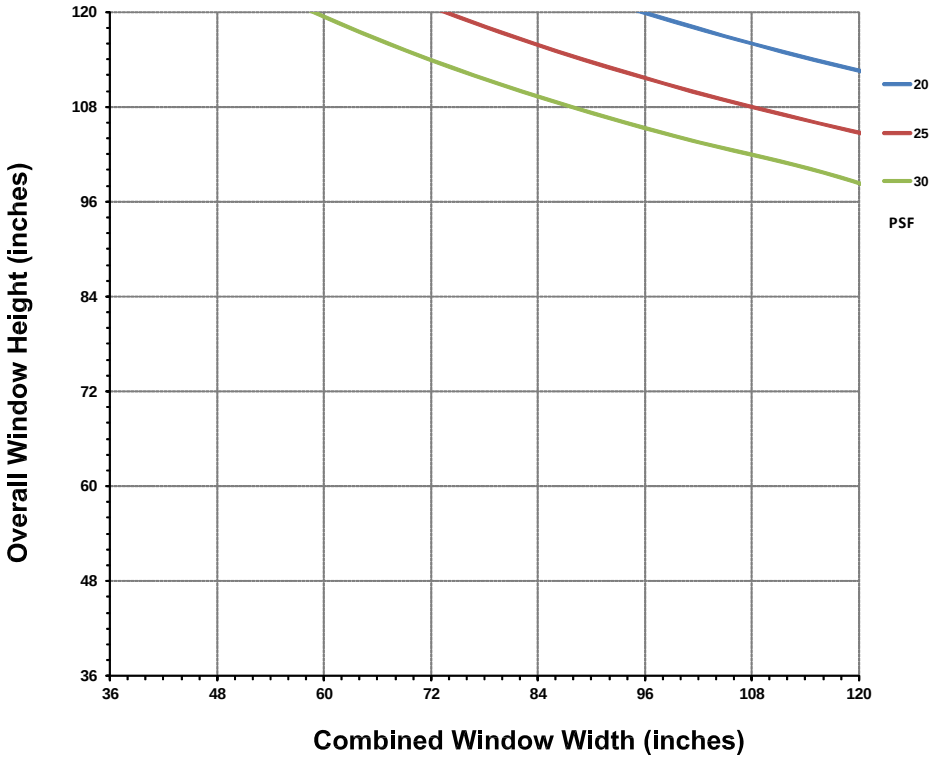

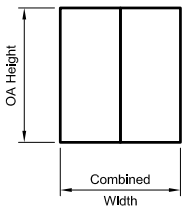

This chart can be used as a guideline for the preliminary structural evaluation of the mullion/stack shown. The chart is based on conservative engineering practices and the minimum result from either L/175 Deflection, ¾" deflection, or 15 ksi outer fiber stress. The chart reflects the structural strength of only the mullion and reinforcement running the full height of the opening. WINCO highly recommends consulting an engineer for any of the following circumstances:

- The window under consideration falls close too or on the design pressure line.
- Any rail exceeds 48" with a large (>16ft²) light of glass above.
- Any vent width exceeds 60".
- Window exceeds the maximum size shown.
- Window has multiple rails (>3).

© WINCO WINDOW COMPANY, INC. 2010

3250 Series 3-1/4" Thermal Fixed and Projected Windows
Product Details - Mullion SR-41

Note: Multiple configurations of this window system are available. Refer to Detail-CD in front of catalog for additional options or contact your local Winco Sales Representative for information

WINCO RESERVES THE RIGHT TO MODIFY OR CHANGE INFORMATION WITHIN THIS BOOK WHEN DEEMED NESSESARY FOR PRODUCT IMPROVEMENT

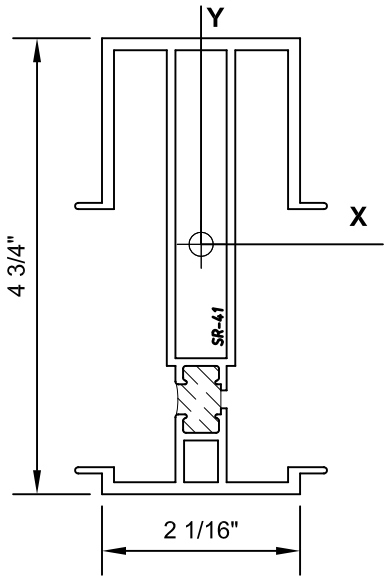

Combined Properties

	X-X	Y-Y
I	5.3550 in^4	0.7738 in^4
S	2.0574 in^3	0.5891 in^3

Wind Load Chart

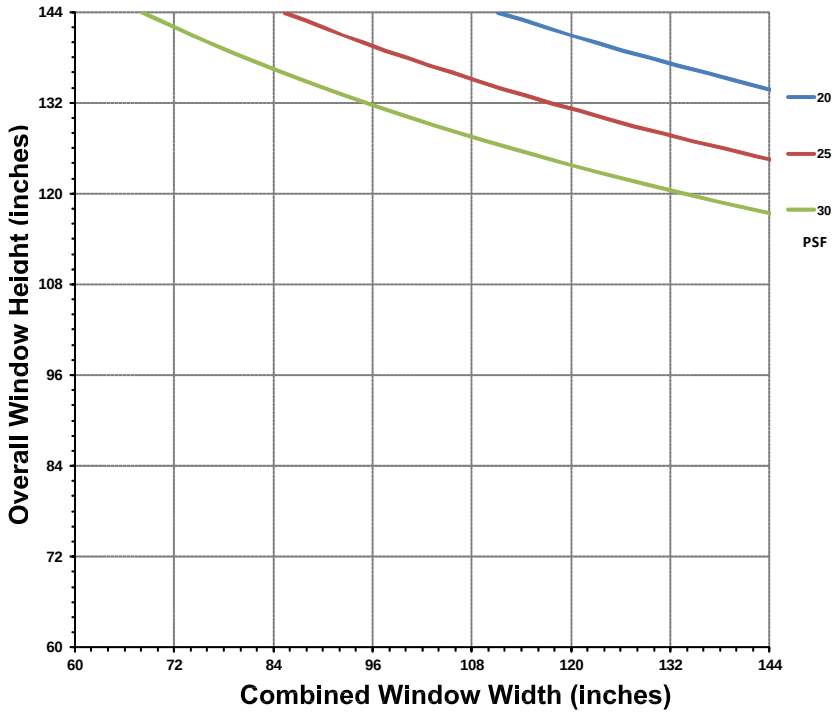

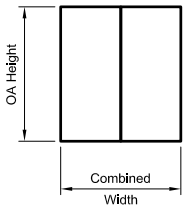

This chart can be used as a guideline for the preliminary structural evaluation of the mullion/stack shown. The chart is based on conservative engineering practices and the minimum result from either L/175 Deflection, ¾" deflection, or 15 ksi outer fiber stress. The chart reflects the structural strength of only the mullion running the full height of the opening. WINCO highly recommends consulting an engineer for any of the following circumstances:

- The window under consideration falls close too or on the design pressure line.
- Any rail exceeds 48" with a large (>16ft²) light of glass above.
- Any vent width exceeds 60".
- Window exceeds the maximum size shown.
- Window has multiple rails (>3).

© WINCO WINDOW COMPANY, INC. 2010

Note: Multiple configurations of this window system are available. Refer to Detail-CD in front of catalog for additional options or contact your local Winco Sales Representative for information

WINCO RESERVES THE RIGHT TO MODIFY OR CHANGE INFORMATION WITHIN THIS BOOK WHEN DEEMED NESSESARY FOR PRODUCT IMPROVEMENT

THIS PAGE LEFT BLANK

© WINCO WINDOW COMPANY, INC. 2010

3250 Series 3-1/4" Thermal Fixed and Projected Windows
Product Details - Trim - Receptor Installation

Note: See Winco Installation Instructions for a detailed description of installation notes and procedures.

WINCO RESERVES THE RIGHT TO MODIFY OR CHANGE INFORMATION WITHIN THIS BOOK WHEN DEEMED NESSESARY FOR PRODUCT IMPROVEMENT

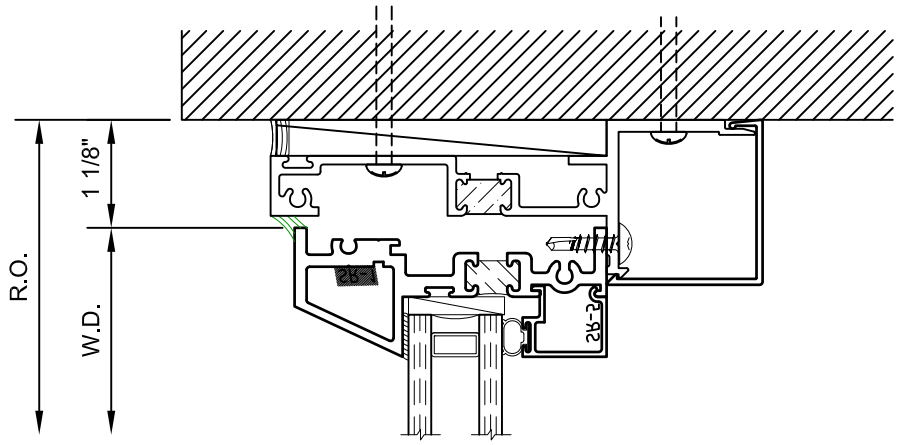

Note:
Receptor-Pan is mitered and pre-fit to window(s)

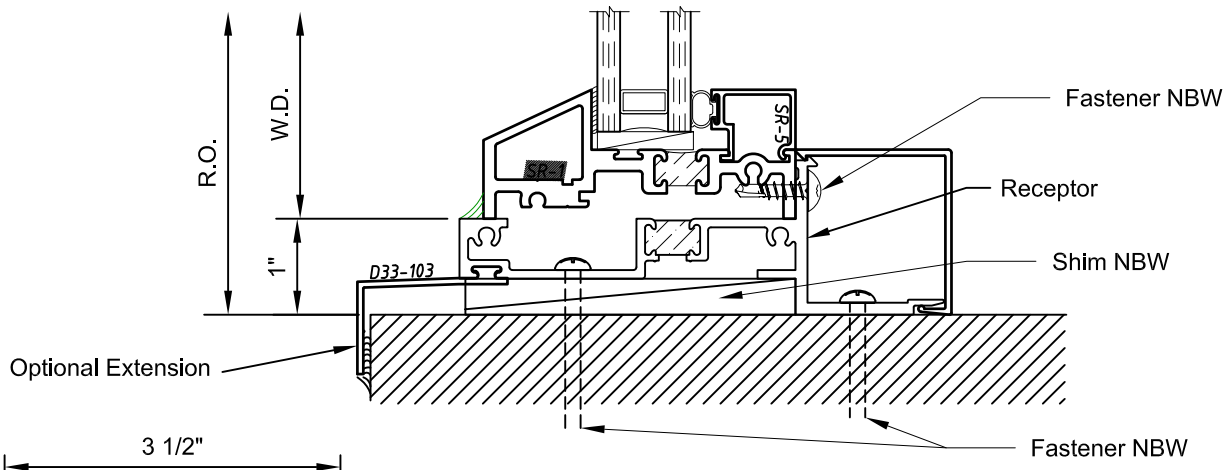

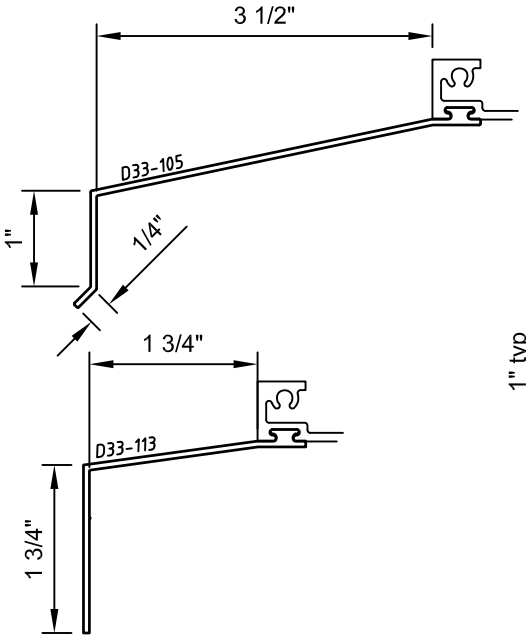

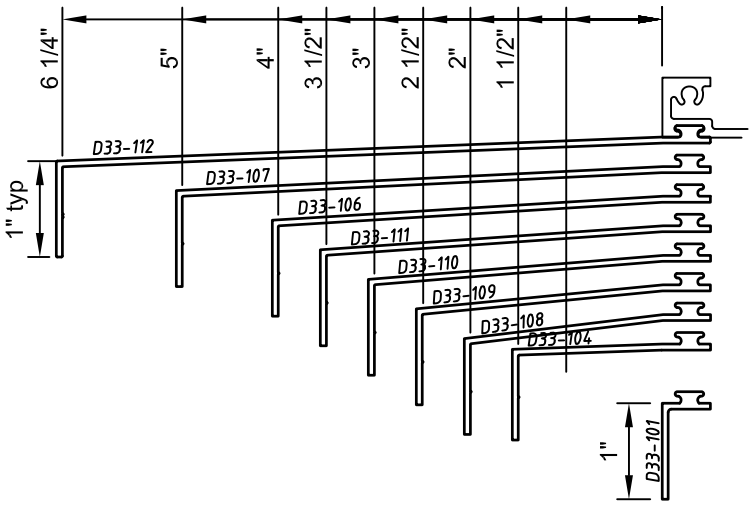

SCALE 6"=1'-0"

© WINCO WINDOW COMPANY, INC. 2010

3250 Series 3-1/4" Thermal Fixed and Projected Windows
Product Details - Trim - Panning Installation

Note: See Winco Installation Instructions for a detailed description of installation notes and procedures.

Head / Jamb Detail

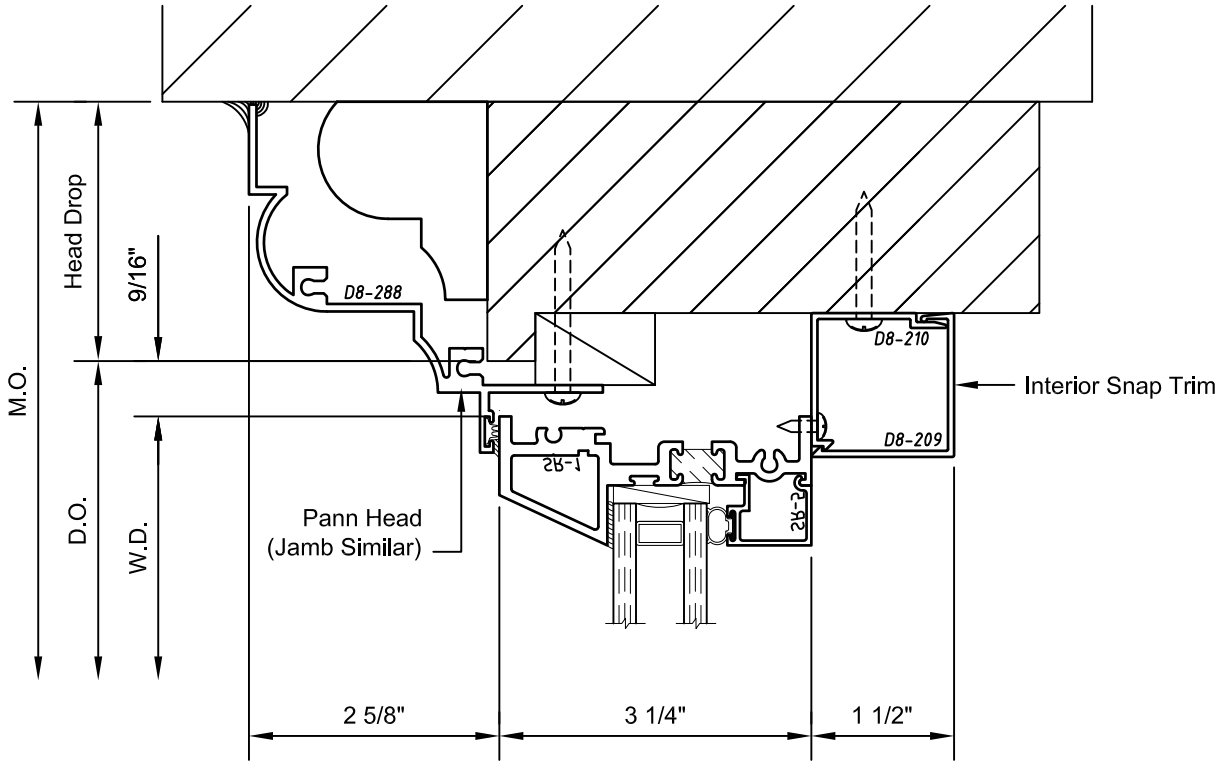

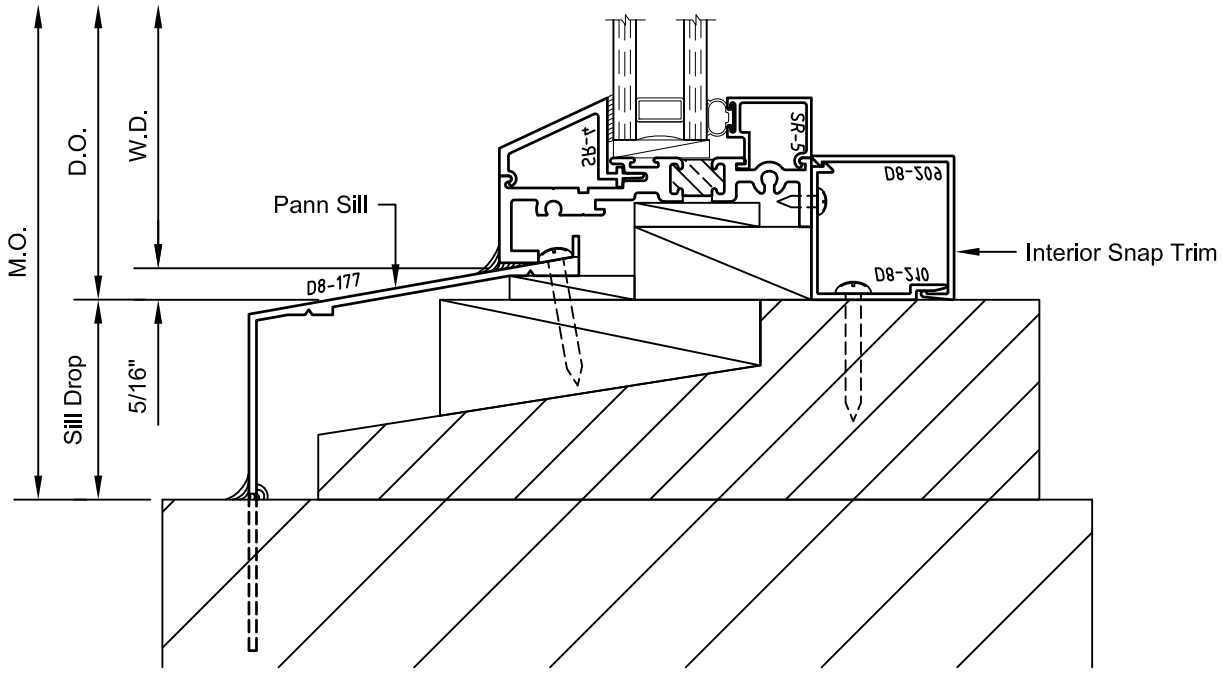

Sill Detail

Note:
Typical panning system shown. Refer to "Panning and Trim" section of detail binder for all panning and interior snap trim options

SCALE 6"=1'-0"

WINCO RESERVES THE RIGHT TO MODIFY OR CHANGE INFORMATION WITHIN THIS BOOK WHEN DEEMED NESSESARY FOR PRODUCT IMPROVEMENT

© WINCO WINDOW COMPANY, INC. 2010

3250 Series 3-1/4" Thermal Fixed and Projected Windows
Product Details - Trim - F Anchor and Snap Trim Installation

Note: See Winco Installation Instructions for a detailed description of installation notes and procedures.

WINCO RESERVES THE RIGHT TO MODIFY OR CHANGE INFORMATION WITHIN THIS BOOK WHEN DEEMED NESSESARY FOR PRODUCT IMPROVEMENT

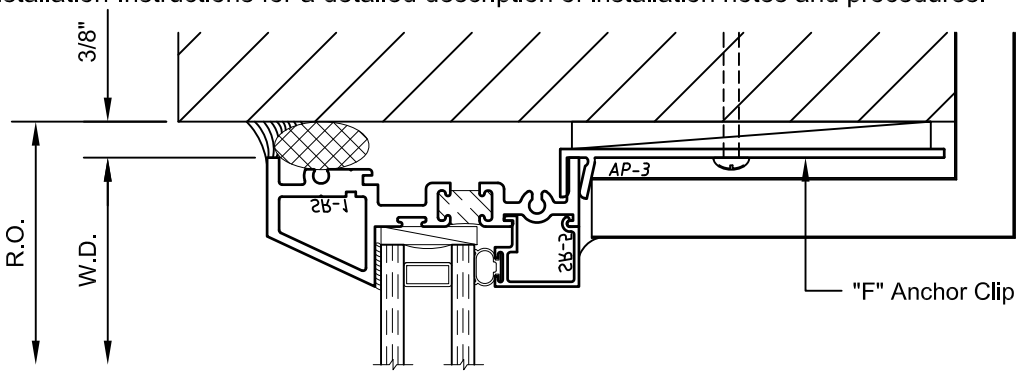

"F" Clip Installation

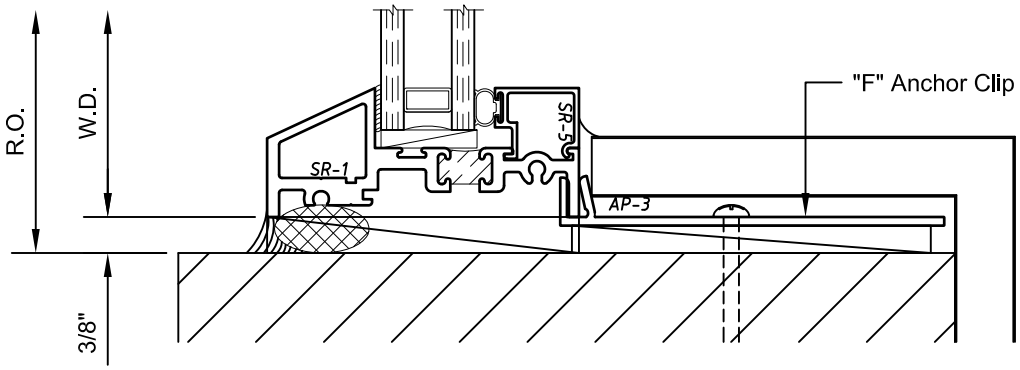

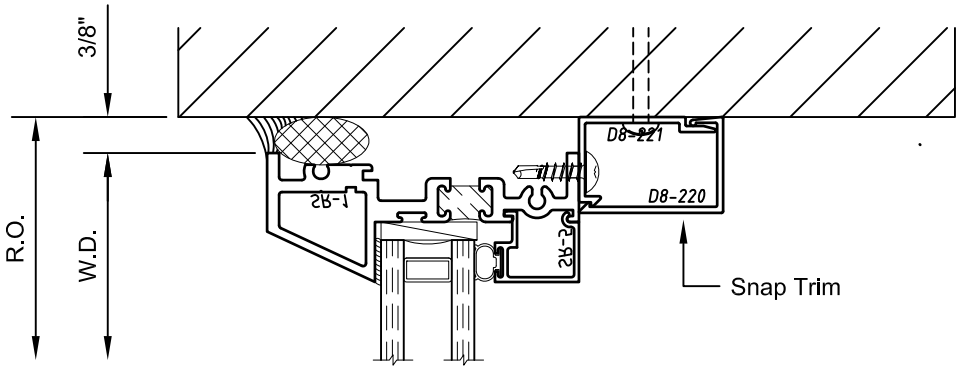

Snap Trim Installation

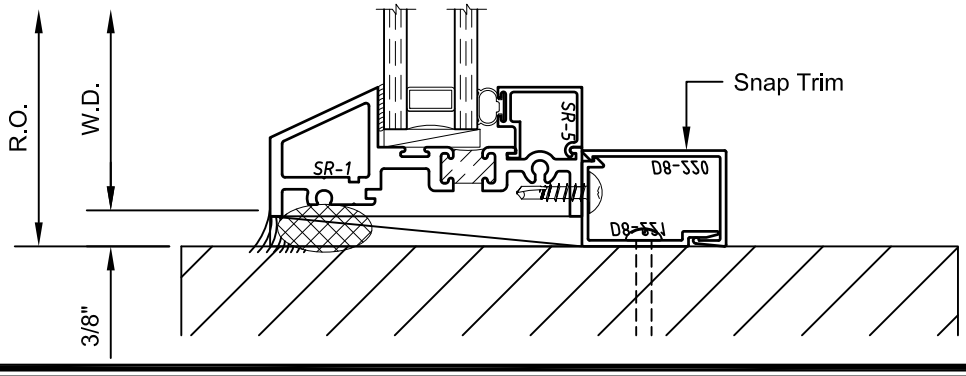

SCALE 6"=1'-0"

© WINCO WINDOW COMPANY, INC. 2010

Typical Side Stack Framing

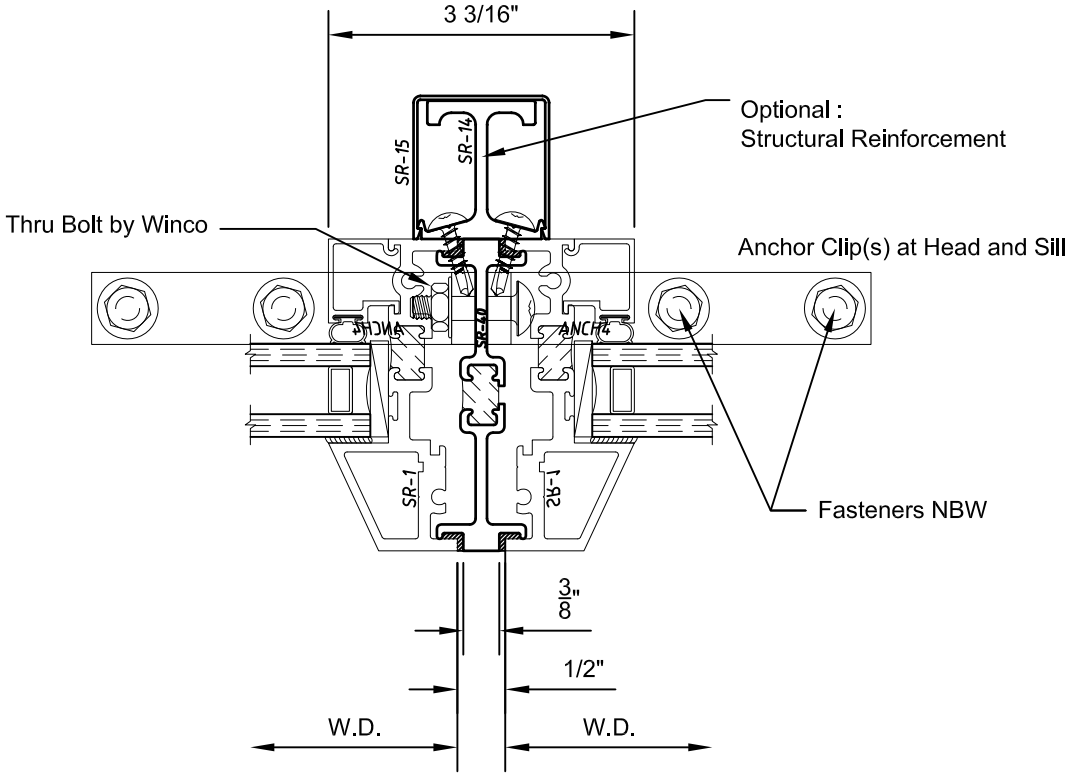

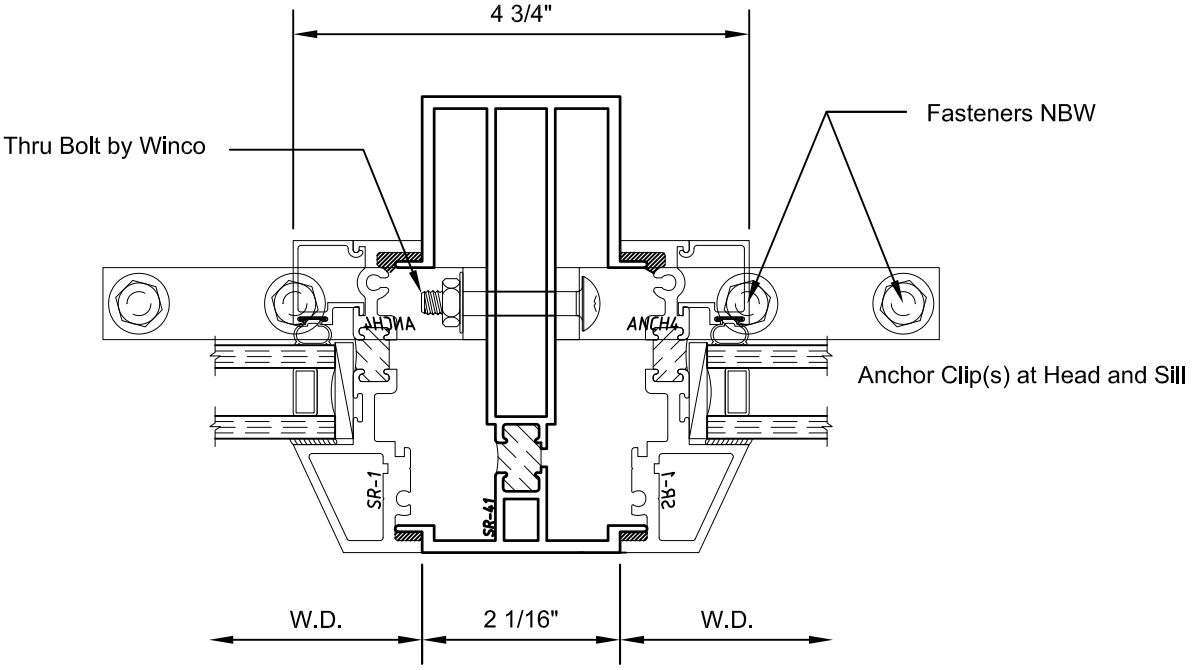

SCALE 6"=1'-0"

WINCO RESERVES THE RIGHT TO MODIFY OR CHANGE INFORMATION WITHIN THIS BOOK WHEN DEEMED NESSESARY FOR PRODUCT IMPROVEMENT

© WINCO WINDOW COMPANY, INC. 2010

5700 W Douglas Ave
Milwaukee, WI 53218

"Commercial – Residential – Industrial"

Phone 414-527-1678
Fax 414-527-1679
Email customerservice@heritageglassinc.net

RE: Riviera Building – Lake Geneva

During the site visit on August 30, 2018 I inspected the existing windows and surrounding perimeter structure.

Observations

For the most part the building is in good shape, some repairs to structure would have to be made after removal of existing windows and before installation of new windows. Due to the location of where the building sits and site conditions, sequencing of repairs and replacements is critical. Areas under construction would need to be protected from the public.

There are a few original steel sash windows remaining on the first floor and possibly the clerestory windows. The second-floor windows, first and second floor doors and frames have been replaced in an aluminum bronze anodized finish. The second-floor windows appear to be in a fair condition however, there appears to have been some water penetration due to improper installation of sill flashing and deteriorated perimeter caulking. The existing doors on the second floor are not part of the original building and have a unique design. The hardware used on these doors are not available anymore, so any repairs needed would be difficult. The first-floor doors are more modern but do show signs of aging, and wear and tear due to heavy usage.

The clerestory windows will be a challenge to replace. These windows may need to be replaced from the outside off the roof because access from inside may be difficult.

Recommendations

Time will be of the essence due to the "off months" when work will occur. I have been told it would be the winter months with a short duration of time. It will be critical to pre-determine window sizes and design in order to meet the schedule. The building will also need to be protected against winter conditions. All the existing steel sash windows and bronze aluminum frames will need to be removed and perimeter conditions repaired prior to installation of new windows.

The original picture indicates the existing building was not bronze anodized. To meet the historical society requirements, research needs to be done to establish guidelines for finish of the aluminum, and specific design. My recommendation is to have the architect contact Winco Window during the final design stage. They have a 3250-steel sash replica fixed and operable window series (see attached product info). They have done numerous projects in the area and have a rep (Craig McGregor 847-382-1707) that is very familiar with their products and is also familiar with this building. Craig can also help

5700 W Douglas Ave
Milwaukee, WI 53218

"Commercial – Residential – Industrial"

Phone 414-527-1678
Fax 414-527-1679
Email customerservice@heritageglassinc.net

with doors and frames. Once specifications and new plans are established, the project could be accurately bid. I also recommend the glass used should be 1" clear insulated with Argon Gas and Solarban 60 Low-E to achieve recommended U and SGHC values.

It is difficult to give a budget for the glass replacement without the final design. Best guess would be $325,000 to $375,000

In conclusion, this is a beautiful building in a fantastic location. Replacing all the windows and doors with modern technology, thermally broken aluminum and glass and restoring the building back to its original appearance would be the ultimate goal.

Respectfully,

Thomas Malzewski
Heritage Glass LLC

Otis Elevator Company
3202 Progress Road
Madison, WI 53716
Phone 414-319-9621

September 20, 2018 Sent via e-mail on 09/20/2018

MSI General Corporation
Attn: Dave Luterbach
P.O. Box 7
Oconomowoc, WI 53066

Reference: Riviera Building
Lake Geneva, WI

Our BUDGET PRICE to furnish and install one (1) Otis pre-engineered holeless machine room-less style hydraulic passenger elevator per the attached Scope of Work as clarified below is **EIGHTY FIVE THOUSAND DOLLARS ($85,000.00).**

Alternate

- If we tear out the existing elevator, please **ADD $28,000.00** to our Base Price.

This proposal is submitted with the understanding that any contract resulting there from will be subject to review and mutual acceptance of all terms and conditions contained therein. It is conditioned on neither party being liable to the other for any loss, damage or delay due to any cause beyond either parties reasonable control, including but not limited to acts of government, strikes, lockouts, other labor disputes, fire, explosion, theft, weather damage, flood, earthquake, riot, civil commotion, war, mischief or act of God. Under no circumstances shall either party be liable for special, indirect, or consequential damages in contract, tort, including negligence, warranty or otherwise, notwithstanding any indemnity provision to the contrary. Notwithstanding any provision in any contract document to the contrary, our acceptance is conditioned on being allowed additional time for the performance of the Work due to delays beyond our reasonable control.

The above quotation is based on all work being performed during our regular working hours and on the job site conditions outlined in the section, "Preparatory Work by Others" prevailing at the beginning and during installation of the elevator equipment. The section "Preparatory Work by Others" begins on page four (4) of this proposal.

In addition to the above the following clarifications apply:

1. Our proposal is based on the timely furnishing of a completed hoistway for uninterrupted use, approvals & power with permanent characteristics.
2. Our proposal is based on manufacturing lead-times of 12 weeks after approvals.
3. Our hoistway entrances do not require you to furnish steel angles to support each hoistway lobby sill. Otis uses an entrance arrangement eliminating the need for this angle and the associated material and labor costs. Our sill also does not require grouting under the sill, but may require grouting between the face of the sill and the finished floor (grouting by others).
4. On-site storage, approximately 30' x 30' adjacent to the hoistway at the Main egress landing is required. A $2,750.00 charge, per elevator, will be assessed for any double handling of elevator material required by the general contractor/owner. If off-site storage is necessary double handling charges will apply plus monthly storage fees.
5. The work shall be performed for the agreed price including all applicable state use and/or sales tax. In addition to the agreed price, you shall pay to us any future applicable tax imposed upon us, our suppliers, or you in connection with the work described.
6. Our proposal is based the following payment terms and Schedule of Values.

Description	Percent of Total Contract Value / Billing Cycle
Design, Engineering, Material procurement,	35% Billed upon award. Due in 30 days or prior to release of factory orders whichever occurs first.
Factory Materials	45% Billed the month before shipment occurs. Due the month material is delivered. Installation will not commence until the material is paid for.
Installation	20% Billed when the installation is set to begin
Final payment – Retainage	Due thirty (30) days after final acceptance of the elevator installation.

7. Insurance for this project is to be provided in accordance with our standard contract. We do not waive our or our insurer's rights of subrogation.
8. We have not included any special equipment to meet any SEISMIC zone (code) requirements.
9. All miscellaneous steel such as the safety beams are to be furnished and installed by others.
10. Protection of the finished flooring, both inside and outside of the elevator, to be by others.
11. We have included all associated costs for clean up of our work area only. We do not include any costs for general jobsite cleaning. Dumpsters for disposal of our trash and packing materials to be provided to us by others.
12. This proposal is based on performing all work during the hours of 7:00 AM to 3:30 PM and does not include any overtime costs.
13. Patching/Fire caulking of the elevator hoistway to be by others. Our proposal does not include any costs for Otis to run the elevator for others to do any patching.
14. We include our machine room-less design which requires a 3'-0" wide x 7'-0" high rated access door with self-closing, self-locking mechanism added to one side of the hoistway for access to our elevator equipment which will be mounted within the elevator hoistway.
15. Per IBC code venting will be required to prevent spreading of contaminants and odors to other occupied parts of the building.

This quotation is valid for thirty (30) days, and is predicated upon completion of work prior to June 30, 2019 contingent on timely receipt of contract and approvals. We appreciate the opportunity to submit this quotation and look forward to working with you. Should you have any questions concerning this proposal, please feel free to contact this writer at 414-319-9621.

Sincerely

Scott Calkins
New Equipment Sales Manager

Scope of: Elev. #1

Designation & Model	Otis HydroFit™ Elevator System	
Capacity and Speed	2100 lbs Passenger @ 100 fpm	
Stops, Floors & Rise	2 Stops- 2 Front Openings With 14 ft 0 in 0 Of Rise	
Clear Car Inside Dimensions	5 ft 9 in 1/2 wide x 4 ft 4 in 1/8 deep	
Clear Hoistway	7 ft 9 in 0 wide x 5 ft 11 in 0 deep	
Clear Overhead & Pit Depth	Overhead- 12 ft 4 in 0 Pit- 4 ft 0 in 0	
Door Type / Size	One Speed Side Slide- 36 in wide x 84 in high	
Control Space	Machine Roomless- tank and controller in hoistway pit	
Operation	Simplex	
Power Supply	208 Volts, Three Phase AC, 60 Hertz	
Cab Enclosure	Otis laminated steel cab shell, Cab Height: 93 in. Brushed stainless steel standard return, header and car door Brushed stainless steel flat canopy with 4 LED down lights Brushed stainless steel, Flat Bar rear only handrails	
Cab Flooring	Furnished and installed by others- 0.3125 inch recess	
Hoistway Entrance Finish(s)	Brushed stainless steel entrances at front landings-1,2 Aluminum sills at front landings- 1,2	
Signals	Brushed stainless steel standard car operating panel including round buttons with blue illuminating halos Hall fixtures, with flat metal brushed stainless steel faceplates, mounted in entrance jambface and brushed stainless steel flat buttons	
Constant Features	Access at top and bottom landing with zoning Firefighters' Service Phase I and Phase II Handicapped and braille markings Optiguard® door reversal device In car lantern Otis ADA hands free phone Emergency car lighting	
Additional Features	Independent service	
Code Compliance	All applicable local, state and national codes	ANSI A17.1, Wisconsin local code and A.D.A.
	Seismic Zone 0	
Maintenance	12 months after acceptance of elevator by owner including emergency callback service during normal working hours.	

PREPARATORY WORK BY OTHERS

For Hydrofit Elevators

The following items must be performed or furnished at no cost to Otis Elevator Company ("Otis") by the Owner or General Contractor or their agents in accordance with governing codes. The price and installation schedule of Otis Elevator Company is based on these job-site conditions existing at the beginning and during installation of the elevator equipment. Failure to provide the items specified in this list will result in additional work or installation delays performed by Otis Elevator beyond the scope of our contract and a change order will be submitted for materials and/or labor expended. Please refer to our Installation Handbook for details and dimensions for the following items.

All work to be performed per the latest revision of the applicable national code and/or local code.

General Prep/Work

1. Provide any cutouts to accommodate elevator equipment (troughing, venting, and hall fixtures) along with patching and painting of walls, floors, or partitions together with finish painting of entrance doors and frames, if required.

2. Provide tractor trailer access to the building for unloading of material and an onsite storage area for elevator equipment as follows: dry and enclosed, provides roll-able access to the elevator hoistway at the ground level, located within 100 feet of the hoistway, and is larger than 25 x 20 feet per elevator. Any warranties provided by Otis for elevator equipment are null and void if equipment is stored in a manner other than a dry enclosed building structure.

3. Provide sufficient onsite refuse containers for the proper disposal of elevator packaging material. Should sufficient refuse containers not be provided, disposal of packaging material shall become the responsibility of the owner.

Hoistway & Pit Prep/Work

4. Prior to the start of installation, provide a dry, properly framed, enclosed and vented hoistway in accordance with all applicable codes.

5. Provide a clear plumb hoistway with variations from the size shown on the Otis layout not to exceed -0 inch / +1 inch.

6. Furnish adequate rail bracket supports and bracket spacing as required by governing code from pit floor to top of hoistway. For steel or wood frame construction, adequate backing for a rail bracket to be installed not less than 10'-3" or more than 11'-3" from the top landing. Furnish separator beams where required. Rail bracket attachment supports must be exposed and flush with the clear hoistway line.

   If the floor to floor height exceeds the maximum bracket spacing allowed by the elevator code, Otis requires some form of steel support to properly attach our guide rail brackets. The maximum allowed bracket spacing is indicated in the rail force and bracket detail table on the Otis layout. Any rail bracket mounting surfaces that are not in line with the finished hoistway dimension (i.e. the clear hoistway line) may need to be extended to meet the required distance. Otis agrees to provide guidance on this matter at the appropriate time.

   If rail bracket embedded plates or inserts are provided by Otis, they shall be installed by others in accordance with Otis' documentation and instruction.

   If vertical tube steel is utilized as rail support, (2) vertical tubes spaced at 20.4" on center are required for car rail brackets with "A" dimension ≥ 5.76".

7. Furnish a dry pit reinforced to sustain vertical forces on car rails and impact loads on cylinder head(s) and buffer(s). The pit must be dry and clean. The elevator pit must have a floor drain or sump pump to prevent the accumulation of water. Location to be coordinated with Otis to avoid all elevator components and access areas. In areas requiring Firefighter's Emergency Operation, a sump pump / drain shall be provided that shall have the capacity to remove a minimum of 11.4 m³ / h (3,000 gal / h) per elevator (2.2.2.5, ASME A17.1-2007 / CSA B44-07). Otis recommends that the owner verify the system complies with all applicable laws and local codes.

8. Provide and install a fixed vertical iron ladder in each pit as required by governing code and located per Otis layouts, or as coordinated with Otis personnel. Ladder width and projection from wall per local code. If pit depth is greater than 9'-10" [13'-9" with no floor below bottom landing], a pit access door is required.

9. Falls and Falling Objects

. a- **Protection from Falls:**

As required by the Occupational Safety and Health Administration (OSHA)1926.502 B) (1-3) a freestanding removable barricade at each hoistway opening at each floor. Barricades shall be 42" high, with mid-rail and kick board, and withstand 200 lbs of vertical and horizontal pressure.

b- **Protection from Falling Objects:**

As required by the Occupational Safety and Health Administration, (OSHA) 1926.502(j), hoistway protection from falling debris and other trades materials by either.

1) Full entrance screening/mesh in front of all elevator entrances
2) Secured/controlled access to all elevator lobbies (lock and key) with posted Notice "only elevator personnel beyond this protection."

Notes:

Items **a**.) and **b**.) can be integrated systems.

Hoistway barricades and screening shall be constructed, maintained and removed by others.

Hydrofit Hoistway & Pit Prep/Work continued

10. One front entrance wall, at the main landing, is not to be constructed until after all elevator material is located in the hoistway. Remaining front entrance walls are not to be constructed until after door frames and sills are in place. If front walls are poured concrete weight bearing walls, rough openings are to be provided to accept entrance frames and filled in after frames are set. Rough opening sizes per Otis layouts. Prior to the elevator(s) being turned over, all entrance walls must be installed and rough openings filled in complete to maintain fire rated hoistway requirements.

11. Provide adequate support at all fastening points of each entrance. Provide plumb vertical surfaces for entrances and sill supports, one above the other, and square with the hoistway. For 4'-0" and 4'-6" two speed door arrangements, an additional hoistway attachment point is required for an auxiliary support bracket under the sill assembly in the center of the clear door opening. Finish floor and grout, if required, between door frames to sill line. A horizontal support is to be provided 1 foot above the clear opening at the top landing to support the door frame assembly. If floor heights exceed 12'-0", a horizontal support is to be provided 1 foot above the clear opening. If transoms are required, the support would be 1 foot above the transom height.

12. Provide and install a steel safety beam per elevator, from side wall to side wall at the top of the hoistway, capable of withstanding a maximum net live load of 5000 lb. Otis requires 2" clear above the beam. Beam must be removed before car is placed in operation if it infringes on required clearance.

13. Glass used in hoistway construction must block 98% or more of incident full spectrum ultraviolet radiation for the full height of the hoistway.

14. If an emergency door in a blind hoistway is required, provide an outward swinging single section type door with door closer and a self closing barrier per ASME A17.1-2007, section 2.11.1.2. Contact your local Otis personnel for a detailed drawing (AAA26900D_FMI), showing Otis specific requirements

Machine Room or Space Prep Work

15. Provide a suitable dry machine room with access and ventilation in accordance with all applicable codes and regulations. The machine room is to be maintained at a temperature between 60°F and 100°F. When a machine space is used, the machine space will be in the hoistway behind the metal door installed per Hoistway and Pit Prep / Work above with ventilation in accordance with all applicable codes and regulations. The machine space is to be maintained at a temperature between 32°F and 104°F. Relative humidity not to exceed 95% non-condensing. Local codes may require tighter temperature ranges. The temperature and humidity range shall be permanently posted in the machine room / space. Please check with your local code authority for the exact requirements in your area.

Machine room / space(s) and door to meet code compliant fire resistive construction. When a machine room is used, provide a self closing and self locking door with a group 2 locking device. When a machine space is used, provide a standard 3' x 7' self closing and self locking metal door with a group 2 locking device in the hoistway per agreed upon location and Otis layout. In addition, ensure that all air gaps around the machine room / space door are sealed (i.e. threshold, weather stripping, etc.). Self closing mechanism cannot protrude into the machine space at any time.

Provide trenching and backfilling as necessary to accommodate any remote machine room condition that may exist.

Fire Prevention Prep/Work

16. Provide hoistway walls designed and constructed in accordance with the required fire rating (including those places where elevator fixture boxes, rail bracket fastenings, and any other penetration into the hoistway walls).

17. In the United States, provide smoke detectors, located as required, with wiring from the sensing devices to the controller(s) designated by Otis.

    a. For each group of elevators, provide a normally closed contact representing the smoke detector at the designated return landing.

    b. For each group of elevators, provide a normally closed contact representing all smoke detectors located in lobbies, hoistways, or control rooms/spaces, but **not** the smoke detector at the designated return landing (see above) or the smoke detectors as described in i. & ii. below.

        i. If a smoke detector is located in the hoistway at or below the lower of the two recall landings, it shall be wired to activate the same normally closed contact as the smoke detector located in the lobby at the lower of the two recall landings.

        ii. If the control room(s)s/space(s) are locate at the designated return landing, the smoke detectors located therein shall be wired to activate the same normally closed contact as the smoke detector at the designated landing.

    c. Requirements for intermittently illuminating the fire hat visual signal in the car operating panel, either i. or ii apply.

        i. or a single unit or for a group of elevators having one common control room/space and one common hoistway, provide one additional normally closed contact representing the control room/space and hoistway smoke detectors.

        ii. If the group contains more than one hoistway and hoistway smoke detectors are installed, or if the group has more than one control room/space, provide one normally closed contact for each elevator. The contact is to represent the smoke detector in the control room/space for that particular elevator, and any smoke detectors in the hoistway containing that particular elevator.

18. In the United States, if sprinklers are installed in the hoistway(s), control room(s)/space(s), or machine space(s), a means to automatically disconnect the main line power supply of the affected elevator and any other power supplies used to move the elevator upon or prior to the application of water is required (unless prohibited by local code.) In addition, when the Automatic Recovery Operation (ARO) is specified, the means provided to automatically disconnect power to the elevator shall be equipped with an additional auxiliary contact that is positively opened when power is removed from the elevator system. This automatically controlled mainline disconnect must be provided with all associated wiring and conduit to the controller.

19. Provide a Class "ABC" fire extinguisher, minimum 10 lbs., in the machine room or in a location convenient to the machine space.

Hydrofit Electrical Requirements

20. All 125 volt, 15 or 20 ampere single phase receptacles installed in pits, machinery spaces, and elevator car tops shall be of ground fault circuit interrupter (GCFI) type. All 125 volt, 15 or 20 ampere single phase receptacles installed in machine rooms / spaces shall have GFCI protection. A dedicated single phase receptacle supplying a permanently installed pit sump pump shall not require GFCI protection. (NEC 620-85 or CEC Rule 38-085).

21. Furnish a dedicated, balanced, 3 phase, 3 wire electrical feeder system with a separate solidly grounded equipment grounding conductor terminating in the machine room / space. Size of the feeders and grounding conductor to suit elevator power characteristics. Feeder conductors and grounding conductor must be copper. A fused disconnect switch or circuit breaker capable of being locked in the open position for each elevator per the National Electrical Code (ANSI/NFPA 70) or Canadian Electrical Code (C22.1) with feeder or branch wiring to the controller (NEC 620-51, 620-61(D), and 620-62 or CEC Rule 38-013(2)(a)) must be provided. Fuses are to be current limiting class RK1 or equivalent. Circuit breakers are to have current limiting characteristics equivalent to class RK1 fuses. Fuses or circuit breakers are to be time delay to cover the full load up accelerating current as listed in the Otis Confirmation of Power Supply form.

Furnish a separate 120 volt, 15 ampere single phase branch circuit and SPST fused disconnect switch or circuit breaker capable of being locked in the open position to supply the car lights, receptacles, auxiliary lighting power source, and ventilation on each car in compliance with the National Electrical Code must be provided.

When a machine room is used and where practical, disconnects shall be located adjacent to the door of the machine room enclosure. When a machine space is used, disconnects or circuit breakers shall be located behind the door of the machine space per Otis layout.

Branch circuit wiring to each controller (NEC 620-53 or CEC Rule 38-053) must be provided.

A convenience outlet and a suitable light of not less than 200 Lux (19FC) as measured at floor level must be provided in the machine room / space with a light switch located within 18” of lock jamb side of machine room door when a machine room is used, or outside the machine space door on the lock jamb side per Otis layout when a machine space is used (NEC 620-23 or CEC Rule 38-023).

A convenience outlet and light fixture of not less than 100 Lux (10FC) as measured at the pit floor level must be in the pit with a light switch located adjacent to the pit access door (NEC 620-24 or CEC Rule 38-024). The light bulb(s) shall be externally guarded to prevent contact and accidental breakage.

[Note: Consult with the Otis Construction Superintendent at your location concerning the following paragraph.]

To meet the date upon which the elevators are to be turned over, the permanent 3 phase feeder system and protective devices must be installed and power available prior to the start of elevator installation.

22. Provide 120 volt, 20 ampere power for light, tools, hoist, etc. to the hoistway during installation. Source must be within 75 feet of the hoistway.

23. Provide one (1) dedicated outside telephone line per elevator car to the elevator machine room / space(s), and terminated at the controller designated by the Otis construction superintendent. Reference the A17.1 code and the Otis Confirmation of Power Supply for specific requirements.

24. **Options:**

For Elevators with an intra building Intercom- Provide a separate 120 volt, 15 ampere, single phase power supply with fused SPST disconnect switch or circuit breaker located as required for intercommunicating system power supply. Circuit to be arranged for feeding from the building emergency lighting supply if provided. Conduit and wiring for remotely located intercommunicating stations must be provided.

You agree to indemnify and save Otis harmless against any and all liability and costs arising out of your failure to carry out any of the foregoing requirements.

Site Walk-Through

There will be a pre-bid walkthrough on XXX at XXX All interested bidders and their sub-contractors are to meet in the front lobby at XXX a.m. Attendance to this walkthrough is **mandatory** as a prerequisite prior to submitting this bid. Attendance of the walkthrough does not relieve the bidder from the responsibilities and replacements as detailed in this document. No pleas of ignorance of conditions that exist, or of difficulties or conditions that may be encountered or of any other matter concerning the work to be performed will be accepted as an excuse for any failure or omission on the part of the Bidder to fulfill every detail of all the requirements of the documents governing the work.

ELEVATOR MODERNIZATION SPECIFICATION

1.01 SCOPE OF WORK

A. Furnish all engineering, materials, labor, tools, equipment, transportation, supervision, testing and inspections to modernize one (1) passenger elevator as specified herein. In addition, perform full coverage warranty maintenance service for a one year period upon completion.

B. In all cases where a device or part of the equipment is herein referred to in the singular number, it is intended that such reference shall apply to as many such devices as are required to complete the installation.

C. Any items not specified in detail by the Contract/Specification but which are incidental to or necessary for the complete installation and proper operation of the work described herein or reasonably implied, shall be furnished as if called for in detail by the Contract/Specification.

D. Bidders must report discrepancies or ambiguities occurring in the Contract/Specification prior to the submission of the bid proposal. Submission of the bid without clarification will reflect acceptance of the Contract/Specification as written.

1.02 STANDARDS AND REGULATIONS

A. All material, design, clearances, construction, workmanship, operation and tests shall be in accordance with the requirements of the most recent issues of the ANSI A17.1 Safety Code for Elevators and applicable state or local codes. Where conflicts occur in the above codes, the most rigid shall apply.

B. Nothing contained in this Contract/Specification shall conflict with any codes or federal, state or local laws, ordinances, rules or regulations governing the work.

1.03 PERMITS AND INSPECTIONS

Contractor shall give all requisite notices, obtain and pay for all permits, and pay all deposits and fees necessary for the installation of all elevator work provided under this Contract/ Specification. In addition, Contractor shall obtain and pay for all necessary state and local inspections and conduct such tests as may be required by the regulations of such authorities. These tests shall be made in the presence of the authorized representative of such authorities. An elevator installation permit shall be displayed on the job site and visible to interested parties.

B. The installation, when complete, shall receive the final approval of all constituted authorities and Contractor shall submit evidence of the inspection results and the Certificate of Operation from the constituted authority.

1.05 CONTRACTOR QUALIFICATION

Contractor shall be one regularly engaged in the business of design, engineering, manufacture, installation, modernization, and/or servicing of elevators of the type and character required by this Contract/Specification, shall be or represent an approved manufacturer, and shall assume full responsibility for the products used in assembling the elevator equipment.

Contractor shall show successful experience in the complete installation, modernization, and maintenance of elevators, that it employs competent personnel trained in the installation, modernization, and maintenance of the equipment required in this Contract/Specification, that it maintains locally an adequate stock of parts for replacement or emergency, and that it has qualified employees locally available to ensure the fulfillment of the service without unreasonable delay. This maintenance service shall be performed solely by Contractor and shall not be assigned or transferred to any agent or subcontractor.

1.06 SHOP DRAWINGS/SUBMITTALS AS BUILT DRAWINGS

A. Job specific shop drawings and technical coordination information shall be submitted for review prior to commencing with fabrication of the equipment. The shop drawings submitted shall be as follows:

1. Elevator Car panel layout, if required.
2. Signal Operating Fixture Details.

B. By approving and submitting shop drawings and samples the contractor thereby represents that he has determined and verified all field measurements, field construction criteria, materials, catalog numbers and similar data, or will do so, and that he has checked and coordinated the shop drawings and samples with the requirements of the work of the contract documents.

C. Owner or authorized representative shall check drawings for design only and approval of drawings, schedules, and catalogs shall not be construed as a complete check and shall not relieve contractor of his responsibilities as stated within this specification.

D. Upon completion of the project, Contractor shall submit the following:

1. Three copies of an Owner manual.
2. Four (4) sets of keys to operate all key operated functions all marked and identified.

1.07 MATERIALS & EQUIPMENT

A. All materials and equipment to be furnished under this Contract/Specification shall be new, of the best grade and quality used for the purpose of commercial practice and shall be the latest standard product as advertised in printed catalogs by reputable manufacturers. All equipment or apparatus of any one system must be the product of one manufacturer, or equivalent products of a number of manufacturers which are suitable for use in a unified or assembled system. All parts of the elevator equipment shall be built to standard dimensions, tolerances and clearances in order to ensure complete interchangeability of similar parts of similar machines and devices. All parts shall be readily available for purchase by all elevator companies and no controller manufacturers shall be used that do not provide continual support and direct part replacement for the life of the elevator (i.e. Motion Control).

1.08 HOISTING, HANDLING AND INSTALLATION OF EQUIPMENT

A. Contractor shall provide for all cartage, handling and receiving, hoisting and lowering and removal of equipment related to the work, from the property. Contractor shall be responsible for all permits, fees and coordination with local authorities, including local police and fire departments.

B. The equipment shall be installed in accordance with the equipment manufacturer's direction, referenced codes and Contract/Specifications.

The machine room equipment shall be installed with clearances complying with referenced and applicable codes and Contract/Specifications.

All items shall be installed so that they are safely accessible for maintenance and so that they may be removable via portable hoist or other means for maintenance and repair.

1.09 ACCEPTANCE OF EQUIPMENT

No approval, either written or verbal, of any drawings, descriptive data or samples of such material, equipment and/or appurtenances shall relieve Contractor of his responsibility to turn over the same to Owner in perfect working order at the completion of the work.

1.10 SPECIAL TOOLS AND INSTRUCTIONS FOR USE

A. Diagnostic tools which require periodic recalibration and/or reinitiation shall not be permitted.

B. Diagnostic tools provided to Owner shall be capable of performing all diagnostics, systems adjustments, safety tests and software program changes that are needed to maintain the equipment provided.

C. If a specific tool is required for maintenance, Contractor shall provide three (3) bound sets of printed instructions for use of any tool that may be necessary to perform diagnostic evaluations, systems adjustment and / or programmable software changes on any unit of the microprocessor based elevator control equipment. Contractor shall provide access codes and password information that is necessary to interface with the microprocessor control equipment.

1.11 RELATED WORK INCLUDED AND PART OF THE ELEVATOR CONTRACT

A. Contractor shall submit its proposal based on acceptance of the hoistways and machine room as exists. Contractor shall notify Owner of any changes to the hoistways and/or machine room, which are necessary

to accommodate Contractor's equipment or to comply with Code prior to the submission of the bid for the elevator modernization.

B. Contractor shall assist Owner with coordination and completion of the work to be performed which is part of the Elevator Contract, as required, during the course of the project to assure that all work required of other trades engaged by the contractor is completed in such a manner and in such time as will be required to permit Contractor to commence and complete the Contract work within the project schedule requirements.

1.12 DEMOLITION, CUTTING, ALTERATIONS AND REMOVALS

A. All demolition, cutting, alterations and removal required to prepare the building to receive the new work, and any such demolition, cutting, alterations and removal which may be necessary to complete the work in a first class workmanlike manner, shall be performed by subcontractor of the Owner.

B. All surfaces, such as roofs, walls, windows, floorings, ceiling, etc., which are damaged or disturbed due to the performance of the work of this contract, shall be repaired by Contractor in a first-class workmanlike manner to match existing and surrounding areas.

C. All permanent and temporary bracing and anchoring required for the support or transfer of any load while demolition or installation work is in progress shall be provided by Contractor. All work shall be made absolutely stable and secure and Contractor shall be held strictly responsible for any damage resulting from failure to properly furnish such support.

D. Contractor shall protect Owner's property, equipment and stored materials against damage, dust and dirt at all times and shall confine all methods of construction to promote safety and reduce noise and dust, due to occupancy of the property and provide necessary protective guards, barricades, tarpaulins and drop cloths.

E. Contractor shall remove all unused and demolished equipment and rubbish on a continual basis and shall keep the premises clean at all times during the term of the project. At the completion of work, Contractor shall leave the premises clean and in such condition as is satisfactory to Owner.

We encourage any questionable areas involved in the elevator parameters warranting further investigation be identified prior to the bid date if possible.

F. The Owner reserves the right to retain any or all materials or removed equipment it deems warranted and shall promptly remove identified items from the work area so as not to interfere with the progress of the work.

1.13 MATERIAL AND EQUIPMENT DELIVERY, STORAGE

A. All materials shall be delivered in the original unopened protective packaging and shall be stored in the protective packaging to prevent soiling, physical damage and wetting.

B. Equipment and exposed finishes shall be protected during transportation, erection and construction against damage and stains.

C. Contractor shall confine his apparatus and the storage of materials to limits established by law, ordinances, permits or directions of Owner and shall not unreasonably encumber the premises with his materials. All flammable or combustible materials shall be properly stored to eliminate potential fire hazards.

1.14 PROJECT MANAGEMENT AND SUPERVISION

Contractor shall designate an experienced Project Manager to perform the administrative management of the project and place a competent Superintendent in charge of the project throughout the course of the work. Contractor's on-site job Foreman shall be responsible for day-to-day operations and scheduling with Owner. The Project Manager and Superintendent shall be available to Owner to assist in the progress and coordination of the work of the project and shall represent Contractor in all matters relating to the project.

1.15 EXECUTION

Contractor shall perform the following as part of the execution of the work of the Elevator Con-tract:

1. Comply with all requirements of the local Fire Codes that are applicable to this work.
2. Be sensitive to the needs and entitlements of the occupants of the building while performing the work.

3. Confirm that the Contract/Specification and contract documents are complete with regard to the work required to provide for a complete, legal and Code compliant installation.
4. Confirm that the elevator equipment to be provided will fit within the space available. Survey the job site and verify by measurement all dimensions affecting the work to be performed as part of the Contract. Advise Owner of any deficiencies which may be in conflict with design tolerances of the equipment to be installed, prior to fabrication of the equipment affected.
5. Provide information as required for coordination of work to be performed by other trades which will affect scheduling of the elevator work and information required for coordination in scheduling the elevator work which will affect the scheduling of other trade contractor work.
6. Permit only skilled, State Licensed workmen to perform the work of the Elevator Contract.
7. Install all equipment in accordance with the Elevator Contract, the Contract/Specification and the final approved shop drawings,
8. Comply with all applicable Codes, manufacturer's instructions and installation procedures.
9. Keep all means of access and egress to and from the building, stairwells and lobbies free and clear of materials, tools and equipment at all times.
10. Broom sweep the work areas, remove all hazardous materials from the site on a daily basis and keep all areas clean of all dirt and grease resulting from the work.
11. Protect all finished surfaces during installation through to the final acceptance of the elevators. Upon acceptance of the elevators, remove all protective coverings and thoroughly clean finished surfaces of paint, wrappings, mastic, etc. Repair any damage, including scratches, dents, discoloration, etc. which may have occurred to the finished surfaces with the exception of any obvious vandalism, misuse or abuse of the equipment by others.

1.16 TESTING

Upon completion, Contractor shall completely test the equipment before the required code authority. Contractor shall provide all labor, tools and equipment necessary for on-site observations, testing, retesting, inspections and re-inspections as may be required to satisfy the Code testing requirements, the requirements of the local testing authority and the requirements of Owner. Upon satisfactory completion of required tests, Contractor shall obtain and submit to Owner the Certificate of Operation or other instrument, which may be required to legally permit Owner to operate the elevator.

1.17 FINAL CLEAN-UP

Upon completion of the project, Contractor shall clean out and remove all loose materials from the hoistway, pit and machine room; remove all crating and packing materials and all unused elevator equipment from the job site; clean the machine room floor of dirt, oil, grease and dust and paint the machine room floor for the machine room pit and car top to be dust free at the time of the Final Acceptance of the elevator system.

1.18 INSTRUCTIONS TO OWNER

Contractor shall provide elevator training upon completion detailing safety procedures, proper operation of all equipment and routine maintenance procedures. In addition, Contractor shall provide explanation and demonstration of each key-switch, including Independent Service Operation, Phase I and Phase II Fire Service Operation.

1.19 WARRANTY AND GUARANTEE

Contractor shall warrant and guarantee, in writing to the Owner, at completion of the contract (when the elevator is approved by the State Elevator Inspector for use by the public) that all equipment provided and installed under this Contract/Specification against defects in materials and workmanship and will correct any defects not due to improper use or care which may develop within one (1) year from the date the last elevator is completed, placed into operation and accepted by Owner. The contractor will remedy such defects within a reasonable amount of time, or within three (3) working days whichever is longer, or the Owner may have such work performed by others and charge all costs to Contractor.

1.20 MAINTENANCE SERVICE

Warranty Maintenance: Once the elevator modernization work has been completed and accepted as substantially complete by the Owner, the Elevator Contactor shall provide warranty maintenance for 12 months. The Warranty Maintenance shall be 24-hour all-inclusive maintenance and not include any proration or exclusions and shall provide comprehensive full coverage which is replacement of all parts and free service calls. There shall be no additional charges for travel time and the length of the service call shall not be limited. The maintenance program service to be provided shall consist of once per month examinations of the equipment, adjustments, lubrication, cleaning, supplies and parts to keep the equipment in proper operation, except such adjustments, parts or repairs made necessary by abuse, misuse or any other causes beyond the control of Contractor. Contractor shall also repair or replace existing retained electrical and mechanical parts of the elevator equipment, whenever this is required, and shall use only genuine standard parts produced by the Manufacturer of the equipment concerned.
All maintenance service work shall be performed solely by Contractor and shall not be assigned or transferred to any agent or subcontractor. The work shall be performed by competent personnel under the supervision and in the direct employ of Contractor.

1.21 CONTINUING SUPPORT

For the elevator model provided, all parts shall be readily available for purchase by all elevator companies for ease of serviceability. Elevator Contractor shall provide field and technical assistance and instructions to Owner or Owner's elevator maintenance company, upon Owner's request, within a reasonable time following Owner's request. This requirement shall be for a period of two calendar years from the date of final completion. Contractor shall also be obligated to perform any repairs and/or replacements of equipment components required by the component Manufacturer to be made to correct faulty design or manufacture.

2.01 ***ELEVATOR SCHEDULE/EQUIPMENT SUMMARY*** *(1)*

	Existing	**After Modernization**

Description:		
Quantity (Elevators)	1	1
Speed	100 FPM	100 FPM
Capacity	2500 lbs.	2500 lbs.
Voltage	Field Verify	Field Verify
Stops/Openings	2	2
Travel (contractor to verify):	Field Verify	Field Verify
Operation	Selective Collective	Selective Collective
Machine Room:		
Power Unit	x	New submersible power unit to contain, valve, pump and motor. Power Unit shall have a muffler that is welded. No inflatable mufflers will be allowed. New hydraulic oil shall be installed. No reusing of existing oil is permitted. Jack shall be purged of old oil.
Controller	x	Provide new microprocessor controller. No third party controls and no proprietary components will be allowed.
Emergency Return Unit - ALTERNATE	None	A battery operated means to lower the elevator to the lowest landing and allow passengers to exit in the event of a power loss shall be provided and install.
Oil line		No leaking victaulic fittings shall be permitted. If any are leaking or showing signs of wear, replace. A shut off valve shall be installed.
Hoistway:		
Hoistway door equipment Hoistway Door Panels	x	Replace and install new hoistway door gibs, door locks, rollers, closers and relating hardware. Rebuild or replace unlocking devices. Clean and adjust existing tracks and hangers to a like new condition. Retain hoistway door panels and frames.
Hoistway limit switches and limit cams		Provide all new terminal stopping and slowdown devices.
Hydraulic plunger and cylinder		Retain the plunger and cylinder however replace the packing after the current oil is purged from the cylinder reservoir. Do not reuse old packing after oil is purged.
Wiring/Duct		Provide all new wiring and duct to meet UL/CSA ratings and standards.

Traveling Cable		The new traveling cable is to have at least 10% spare wires. It shall be terminated in a new top of car junction box for ease of maintenance and troubleshooting.
Oil Return		Install a heavy duty oil return with water detection float.
Car:		
Car-top equipment		Provide all new car top inspection station, and car top two speed fan. Install new car top lighting as per state and local codes.
Car guides		Replace slide guide inserts.
Door Operator	Otis	Provide new closed loop door operator. The door operator processor will monitor the door's actual position and velocity compared to its desired position and velocity. If variations are detected in the profile the command will be automatically corrected.
Car Door Equipment	Otis	Retain the existing car door panels. Install new rollers, gibs, clutch, gate switch, and relating hardware as needed. Add door restrictors to meet state and local codes.
Door Protection Unit	x	Install new Code compliant Optiguard Door Protection Unit.
Car interior		Install new plastic laminate panels on back and side walls that span the full width and height of the wall sections. Install a flat handrail on the rear wall in accordance with ADA heights. Install a brushed aluminum ceiling with translucent panels.
Pit:		
Stop Switch		Provide pit stop switches in accordance with state and local codes.
Pit Equipment		Paint pit equipment as needed.
Pit Ladder		If needed, install new pit ladder per code requirements.
Signal Fixtures		

Car Operating Panel	Main	Provide new main car operating panel that is code compliant with car position indicator indicating the landing the car is stopped or passing along with the passing signal. Panel operations to include but are not limited to: Light, Fan, Fire Service, Independent Service, Access and Stop Switch.
Hall PB Station		Provide new hall pushbutton fixtures at each floor with any code required key-switches. If you are mounting them in the wall, provide an aesthetic plate to cover existing hole in door jamb.
In Car Lantern		Cover existing in car lantern. Lantern to be in the hall position indicators at each landing
Hoistway Access Switches	x	Provide Hoistway Access Operation as required by code
In car emergency light and alarm	x	Install in new main car operating panel
Emergency Phone		Install new ADA compliant phone built into main panel. Phone to be programmed to a 24 hour monitoring facility per code requirements. Owner to provide phone line.
Braille		Install Braille plates to meet code
Fire Service Box		A box keyed with FEOK1 Key shall be installed at the main landing containing all the code required keys including, but not limited to, the machine room key and fire service key.
Elevator Signs		Furnish and install all code required signs.

2.02 WORK BY THE OWNER OR ITS SUBCONTRACTORS:
The following work will be performed by subcontractors of the owner.

- Provide an auxiliary contact on the main line disconnect switch and run two #18 wires from this auxiliary contact to the elevator controller such that when the main line disconnect switch is in the ON position, the auxiliary contact is closed and opens mechanically when the main line disconnect switch is placed in the OFF position. (If alternate for an Emergency Return Unit is approved.)
- Fused mainline disconnect switch with correct size fuses installed per controller specifications, lockable in the "off" position, in the machine room with feeder wires to the transformer, all piped in accordance with N.E.C. and grounded. Disconnect switch will be in sight of elevator machine and shall be the type that cannot be engaged with the door open. Power supply will be a 4-wire system with a separate ground.
- If the Owner decides to add sprinklers at the time of this elevator modernization, then an electrician will need to provide an automatic disconnect for elevator power (shunt trip) with heat sensing devices.
- Provide one (1) 120 volt AC, 15 amp, single-phase power supply with fused SPST disconnect switch, lockable in the "off" position, in the machine room with feeder wiring to the controller for car light supply.
- Installation of proper lighting in the machine room. Replace the existing fixtures in the machine room to meet code of 19 foot candles of light with protective grilles.
- Moisture proof type pit light and switch with duplex convenience outlet; switch shall be adjacent to the pit ladder 18" and 36" above the access floor. The pit convenience outlet shall have Ground Fault Protection (GFIC). Minimum illumination at the pit floor is 10-foot candles at the pit ladder, floor level.
- Add GFCI convenience receptacle in the machine room
- Hoistway venting per code.
- Provide smoke detectors and modify as needed to meet the requirements of the lobby units and machine room for the elevator recall functions. Wire to controllers. Main Egress is 1st floor. Alternate floor will the 2nd floor.
- Fire caulking where needed.
- Machine room door shall be self closing, self locking and swing outward with signage on the machine room door stating "Elevator Equipment Room". Door construction shall meet NFPA codes.
- If there are any holes in the hoistway wall, patch to maintain the fire rating.
- Provide any wall finishing (if any) to accommodate hall button fixtures.
- Smoke detectors will be connected to the Owner's current smoke detector monitoring system. Smoke detectors shall be installed in each elevator lobby at each floor and associated elevator machine rooms and shall perform per ANSI A17.1 code.
- The Owner will provide to the Elevator Contractor electrical power for their lights, tools, hoists, etc… during installation as well as electric current for starting, testing, and adjusting the elevator.
- The Owner shall provide a phone line for the elevator phone.

3.0 BID FORM

This proposal is irrevocable for 90 days. It cannot be altered or reworded for 90 days from the date of the bid opening.

3.1 BID PRICE

The undersigned, having familiarized ourselves with local conditions affecting the cost of the work, and with the specifications and related documents including addenda, if any thereto, hereby proposes to furnish all labor, materials, equipment and services for the modernization of one (1) hydraulic passenger elevator at:

XXX for the Base Bid of:

_____

Dollars ($_____)

Billing rates for any additional work not included in the specifications, if any, shall be:
(Regular Hour)
Mechanic _____ per hour. Team _____ per hour.

DATE:_____ COMPANY:_____

PHONE:_____FAX:_____

AUTHORIZED SIGNATURE:_____

PRINTED NAME: _____

TITLE: _____

3.2 PROJECT TIMELINE

The Owner anticipates starting this project XXX based on this information, complete the following questions:

The anticipated duration of the complete project, in days (including weekends), from the receipt of a fully executed contract to the inspection of the elevator and handover to the Owner.
_____ DAYS.

The anticipated manufacturing lead time, in days (including weekends), from the receipt of a fully executed contract and approved ordering information.
_____ DAYS.

The anticipated down time of the elevator resulting in limited or no public use of the elevator, in days (including weekends), during the contract period.
_____ DAYS.

3.3 FREE MAINTENANCE
Information for the one year of free maintenance:

Name and Location of primary mechanic assigned to Building:

NAME:_____ LOCATION: _____

Name and location of backup mechanic:

NAME:_____ LOCATION: _____

3.4 REFERENCES
List three customers within a 100 -mile radius to whom you have provided a similar elevator modernization to within the past 3 years:

#1
BUILDING: _____ CITY: _____

CONTACT NAME: _____ PHONE #:_____

#2
BUILDING: _____ CITY: _____

CONTACT NAME: _____ PHONE #:_____

#3
BUILDING: _____ CITY: _____

CONTACT NAME: _____ PHONE #:_____

3.5 CLARIFICATIONS
It is understood that the bid price above is based on the specifications, related information and addenda (if any) if there are any clarifications to the bid they must be listed below:

_____

_____

_____

_____

_____

_____

_____

Architect's and Consultant's Specification Guide

For

Otis Elevator Company

HydroFit™

Machine-Room Less Hole-Less Hydraulic Elevator

Prepared according to
Construction Specifications Institute (CSI)

GENERAL

SUMMARY

This Section specifies hydraulic elevators.

Work Required:

The work required under this section consists of all labor, materials and services required for the complete installation (including operational verification) of all the equipment required for the elevator(s) as herein specified.

All work shall be performed in a first class, safe and workmanlike manner.

In all cases where a device or part of the equipment is herein referred to in the singular, it is intended that such reference shall apply to as many of such devices or parts as are required to make complete installation.

Related work not specified herein: The following sections contain requirements that relate to this section and are performed by trades other than the elevator manufacturer/installer.

Section 01500 - Construction Facilities and Temporary Controls: protection of floor openings and personnel barriers; temporary power and lighting.

Section 02200 - Earthwork: excavation for cylinder well casing.

Section 03300 - Cast-In-Place Concrete: elevator pit, elevator motor and pump foundation, and grouting thresholds.

Section 04200 - Unit Masonry: masonry hoistway enclosure, building-in and grouting hoistway door frames, grouting thresholds.

Section 05500 - Metal Fabrications: pit ladder, divider beams, support for entrances and rails, hoisting beam at top of hoistway.

Section 07145 - Cementitious Waterproofing: waterproofing of elevator pit.

Section 16100 - Electrical: Section 16100 - Electrical:

Main disconnects for each elevator.

Electrical power for elevator installation and testing.

Disconnecting device to elevator equipment prior to activation of sprinkler system.

The installation of dedicated GFCI receptacles in the pit and overhead.

Lighting in controller area, machine area and pit.

Wiring for telephone service to controller.

Section 16610 - Standby Power Supply Systems: emergency generator for elevator operation.

Section 16720 - Fire Alarm Systems: fire and smoke detectors and interconnecting devices; fire alarm signal lines to contacts in the machine area.

Section 16740 - Telephone Systems: ADAAG-required emergency communications equipment.

Applicable Codes: Comply with applicable building and elevator codes at the project site, including but not limited to the following:

ANSI A117.1, Buildings and Facilities, Providing Accessibility and Usability for Physically Handicapped People.

ADAAG, Americans with Disabilities Act Accessibility Guidelines.

ANSI/NFPA 70, National Electrical Code.

ANSI/NFPA 80, Fire Doors and Windows.

ASME/ANSI A17.7, Safety Code for Elevators and Escalators.

ANSI/UL 10B, Fire Tests of Door Assemblies.

CAN/CSA C22.1, Canadian Electrical Code.

CAN/CSA-B44, Safety Code for Elevators and Escalators.

EN 12016 (May 1998): “EMC Product Family Standards for lifts, escalators, and passenger conveyors Part 2 – immunity”

Local Building Codes.

All other local applicable codes.

SYSTEM DESCRIPTION

Equipment Description: Equipment Description: Holeless Hydraulic elevator with Machine-Roomless application.

Equipment Control: Elevonic® Control System.

Quantity of Elevators: 1

Elevator Stop Designations: Front Only At 1,2

Stops : 2

Openings: In Line

Travel: 14 ft 0 in 0

Rated Capacity: 2100 lbs Passenger

Rated Speed: 100 fpm

Platform Size: 5' 9- 1/2" wide x 4' 11- 1/8" deep

A. Clear Inside Dimensions:

5 ft 9 in 1/2 wide x 4 ft 4 in 1/8 deep

Cab Height: 93”

Clear Cab Height: 7’ 9”

Single-Slide door 36”

Entrance Height: 7’ 0”

Main Power Supply: 208 Volts + or - 5% of normal, three-Phase, with a separate equipment grounding conductor.

Car Lighting Power Supply: 120 Volts, Single-phase, 15 Amp, 60 Hz.

Machine and Controller Location: No machine-room required, tank and controller in hoistway pit.

hoistway accessible by a door in a side hoistway wall on the 1st landing

Signal Fixtures: Manufacturer’s standard with metal button targets (exc. CA).

Stopping Accuracy: ±1/4" (6.4 mm*)* under any loading condition or direction of travel.

Operation: Simplex Collective Operation- Using a microprocessor-based controller, operation shall be automatic by means of the car and hall buttons. If all calls in the system have been answered, the car shall park at the last landing served. served.

Operating Features – Standard

Full Collective Operation

Fan and Light Protection, Sleep Mode

Independent Service.

Full Collective Service.

Firefighters' Service Phase I and Phase II.

Top of Car Inspection.

Operation Features – Optional

Zoned Access at Bottom Landing.

Zoned Access at Upper Landing.

Door Control Features:

Door control to open doors automatically when car arrives at a landing in response to a normal hall or car call.

Elevator doors shall be provided with a reopening device that will stop and reopen the car door(s) and hoistway door(s) automatically should the door(s) become obstructed by an object or person.
Door protection shall consist of a two dimensional, multi-beam array projecting across the car door opening.

Door nudging operation to occur if doors are prevented from closing for an adjustable period of time.

Provide equipment according to: Seismic Zone 0

SUBMITTALS

Product Data: Submit manufacturer's product data for each system proposed for use. Include the following:

Signal and operating fixtures, operating panels and indicators.

Cab design, dimensions and layout.

Hoistway-door and frame details.

Electrical characteristics and connection requirements.

Expected heat dissipation of elevator equipment in hoistway (BTU).

Color selection chart for Cab and Entrances.

Shop Drawings: Submit approval layout drawings. Include the following:

Car, guide rails, buffers and other components in hoistway.

Maximum rail bracket spacing.

Maximum loads imposed on guide rails requiring load transfer to building structure.

Clearances and travel of car.

Clear inside hoistway and pit dimensions.

Location and sizes of access doors, hoistway entrances and frames.

Operations and Maintenance Manuals: Provide manufacturer's standard operations and maintenance manual.

QUALITY ASSURANCE

B. Manufacturer: Elevator manufacturer shall be ISO 9001 certified.

Installer: Elevators shall be installed by the manufacturer.

Permits, Inspections and Certificates: The Elevator Contractor shall obtain and pay for necessary Municipal or State Inspection and permit as required by the elevator inspection authority, and make such tests as are called for by the regulations or such authorities. These tests shall be made in the presence of such authorities or their authorized representatives.

DELIVERY, STORAGE AND HANDLING

Should the building or the site not be prepared to receive the elevator equipment at the agreed upon date, the General Contractor will be responsible to provide a proper and suitable storage area on or off the premises.

Should the storage area be off-site and the equipment not yet delivered, then the elevator contractor, upon notification from the General Contractor, will divert the elevator equipment to the storage area. If the equipment has already been delivered to the site, then the General Contractor shall transport the elevator equipment to the storage area. The cost of elevator equipment taken to storage by either party, storage, and redeliver to the job site shall not be at the expense of the elevator contractor.

WARRANTY

The elevator contractor's acceptance is conditional on the understanding that their warranty covers defective material and workmanship. The warranty period shall not extend longer than one (1) year from the date of completion or acceptance thereof by beneficial use, whichever is earlier, of each elevator. The warranty excludes: ordinary wear and tear, improper use, vandalism, abuse, misuse, or neglect or any other causes beyond the control of the elevator contractor and this express warranty is in lieu of all other warranties, express or implied, including any warranty of merchantability or fitness for a particular purpose.

MAINTENANCE and SERVICE

Maintenance service consisting of regular examinations and adjustments of the elevator equipment shall be provided by the elevator contractor for a period of 12 months after the elevator has been turned over for the customer's use. This service shall not be subcontracted but shall be performed by the elevator contractor. All work shall be performed by competent employees during regular working hours of regular working days. This service shall not cover adjustments, repairs or replacement of parts due to negligence, misuse, abuse or accidents caused by persons other than the elevator contractor. Only genuine parts and supplies as used in the manufacture and installation of the original equipment shall be provided.

The elevator control system must:

Provide in the controller the necessary devices to run the elevator on inspection operation.

Provide on top of the car the necessary devices to run the elevator in inspection operation.

Provide in the controller an emergency stop switch. This emergency stop switch when opened disconnects power from the brake and prevents the motor from running.

Provide system capabilities to enable a remote expert to create a live, interactive connection with the elevator system to enable the following functions:

Remotely diagnose elevator issues with a remote team of experts

Provide real-time status updates via email

Remotely make changes to selected elevator functions including:

Control building traffic: Restrict floor access, remove car from group operation, shut down elevator, select up peak / down peak mode, activate independent service

Conserve energy: Activate cab light energy save mode, activate fan energy save mode, shut down car(s)

Improve passenger experience: Extend door open times, change parking floor, activate auto car full, activate anti-nuisance, advance door opening, door nudging, extend specific floor extended opening time, release trapped passengers

PRODUCTS

DESIGN AND SPECIFICATIONS

Providemachine-roomless holeless hydraulic elevators from Otis Elevator Company. The control system and car design based on materials and systems manufactured by Otis Elevator Company. Specifically, the system shall consist of the following components:

The entire hydraulic system and the controller shall be located inside the hoistway. No extra machine room or control closet space is required.

Sleep mode operation for LED ceiling lights and car fan.

LED lighting standard in ceiling lights and elevator fixtures.

Sleep mode operation for LED ceiling lights and car fan.

Approved Installer: Otis Elevator

EQUIPMENT: MACHINE COMPONENTS

The hydraulic system shall be of compact design suitable for operation under the required pressure. The power component shall be mounted in the hydraulic-fluid storage tank. The control valve shall control flow for up and down directions hydraulically and shall include an integral check valve. A control section including control solenoids shall direct the main

valve and control: up and down starting, acceleration, transition from full speed to leveling speed, up and down stops, pressure relief and manual lowering. All of these functions shall be fully adjustable for maximum smoothness and to meet contract conditions. System to be provided with a low-pressure switch and a shut-off valve.

The entire hydraulic system with hydraulic-fluid storage tank, power component and valves shall be located in the hoistway pit and be easily accessible for maintenance through an access door in the hoistway wall.

A microprocessor-based controller shall be provided, including necessary starting switches together with all relays, switches, solid-state components and hardware required for operation, including door operation, as described herein. A three (3) phase overload device shall be provided to protect the motor against overloading.

The controller shall be located together with the hydraulic system in the hoistway pit and be easily accessible for maintenance through the same access door that is also used for the hydraulic system.

A manual lowering feature shall permit lowering the elevator at slow speed in the event of power failure or for adjusting purposes.

Pressure Switch

Low-oil control.

EQUIPMENT: HOISTWAY COMPONENTS

Plunger(s) and Cylinder(s): Each cylinder shall be constructed of steel pipe of sufficient thickness and suitable for the operating pressure. The top of each cylinder shall be equipped with a cylinder head with a drip ring to collect any oil seepage as well as an internal guide ring and self-adjusting packing. Each plunger shall be constructed of selected steel tubing or pipe of proper diameter machined true and smooth with a fine polished finish. Each plunger shall be provided with a stop ring electrically welded to it to prevent the plunger from leaving the cylinder. Each plunger and cylinder shall be installed plumb and shall operate freely with minimum friction.

Car Guide Rails: Tee-section steel rails with brackets and fasteners.

Polyurethane type buffers shall be used.

Wiring: Wiring for hoistway electrical devices included in scope of the elevator system, hall panels, pit emergency stop switch, and the traveling cable for the elevator car.

Hoistway Entrances:

Frames: Entrance frames shall be of bolted construction for complete one-piece unit assembly. All frames shall be securely fastened to fixing angles mounted in the hoistway and shall be of UL fire rated steel.

Sill Finish(es):

Extruded Aluminum at Front 1,2

Doors: Entrance doors shall be of metal construction with vertical channel reinforcements.

Fire Rating: Entrance and doors shall be UL fire rated for 1-1/2 hour (for M1, M2, M3, D1, and D2 Entrance Arrangements or 1 hour for D3 Entrance Arrangement.

Entrance Finish(es):

Stainless Steel at Front 1,2

Frame Finish(es):

Stainless Steel at Front 1,2

Entrance marking plates: Entrance jambs shall be marked with 4" x 4" (102 mm x 102 mm) plates having raised floor markings with Braille located adjacent to the floor marking. Marking plates shall be provided on both sides of the entrance.

Sight Guards: Black sight guards will be furnished with all doors.

EQUIPMENT: CAR COMPONENTS

Cab Options**:**

Steel shell cab with laminated, vertical panels

Paints and laminate to be selected from manufacturer's catalog of choices.

Brushed Stainless Steel finished base plate located at top and bottom.

Car Front Finish: Satin Stainless Steel.

Car Door Finish: Satin Stainless Steel.

Ceiling Type: Brushed Steel Finish (BSF) Flush Metal Ceiling with 4 LED lights

Emergency Car Lighting: An emergency power unit employing a 6-volt sealed rechargeable battery and totally static circuits shall be provided to illuminate the elevator car in the event of building power failure.

Fan: A one-speed 120 VAC fan will be mounted to the structural ceiling to facilitate in-car air circulation, meeting A17.1 code requirements. The fan shall be rubber mounted to prevent the transmission of structural vibration and will include a baffle to diffuse audible noise. A switch shall be provided in the car-operating panel to control the fan.

Handrails: Handrails shall be provided on the Rear wall of the car enclosure. Handrails shall be 3/8"x 2" (9.5mm x 51mm) Flat Tubular handrail with a Brushed Steel Finish

Threshold: Extruded Aluminum

Emergency Exit Contact: An electrical contact shall be provided on the car-top exit.

Guides: Car roller type guides at the top and the bottom.

Platform: Car platform shall be constructed of metal.

The LED ceiling lights and the fan should automatically shut off when the system is not in use and be powered back up after a passenger calls the elevator and pushes a hall button.

EQUIPMENT: SIGNAL DEVICES AND FIXTURES

Car Operating Panel: A car operating panel shall be provided which contains all push buttons, key switches, and message indicators for elevator operation. The car operating panel shall have a satin stainless steel finish.

A car operating panel shall be furnished. It shall contain a bank of round stainless steel, mechanical LED illuminated buttons. Flush mounted to the panel and marked to correspond to the landings served. All buttons to have raised numerals and Braille markings with:

Flat Flush Mounted satin stainless steel button with blue or white LED illuminating halo)

Optional- 1/8” (3mm) satin stainless steel projecting button with blue illuminating halo

Vandal-Resistant, Flush satin stainless steel button with blue LED illuminating center jewel

Plastic 1/8” (3mm) fully illuminated button with white LED (required by some local California codes)

The car operating panel shall be equipped with the following features:

Raised markings and Braille to the left hand side of each push-button.

Car Position Indicator at the top of and integral to the car operating panel.

Door open and door close buttons.

Inspection key-switch.

Elevator Data Plate marked with elevator capacity and car number.

Help Button: The help button shall initiate two-way communication between the car and a location inside the building, switching over to another location if the call is unanswered, where personnel are available who can take the appropriate action. Visual indicators are provided for call initiation and call acknowledgement.

Landing Passing Signal: A chime bell shall sound in the car to signal that the car is either stopping at or passing a floor served by the elevator.

In car stop switch (toggle or key unless local code prohibits use)

Firefighter’s hat

Firefighter’s Phase II Key-switch

Call Cancel Button

Optional

Firefighter's Phase II Emergency In-Car Operating Instructions: worded according to A17.1 2000, Article 2.27.7.2.

Car Position Indicator: A digital, LED car position indicator shall be integral to the car operating panel.

Hall Fixtures: Hall fixtures shall be provided with necessary push buttons and key switches for elevator operation.

Hall fixtures shall feature:

Integral Hall fixtures shall feature:

Round stainless steel, mechanical buttons marked to correspond to the landings.

Hall fixtures to be located in the entrance frame face. Therefore, separate wiring and installation of electrical boxes inside the wall for the hall buttons are not required.

Buttons shall be in vertically mounted fixture.

Fixture shall be satin stainless steel finish.

Button Options:

Flat Flush Mounted satin stainless steel button with blue or white LED illuminating halo

Optional- 1/8" (3mm) satin stainless steel projecting button with blue illuminating halo

Vandal-Resistant, Flush satin stainless steel button with blue LED illuminating center jewel

Plastic 1/8" (3mm) fully illuminated button with white LED (required by some local California codes)

Car Lantern and Chime: A directional lantern visible from the corridor shall be provided in the car entrance. When the car stops and the doors are opening, the lantern shall indicate the direction in which the car is to travel and a chime will sound.

Access key-switch at top floor in entrance jamb.

Access key-switch at bottom floor in entrance jamb.

EXECUTION

PREPARATION

Take field dimensions and examine conditions of substrates, supports, and other conditions under which this work is to be performed. Do not proceed with work until unsatisfactory conditions are corrected.

INSTALLATION

Installation of all elevator components except as specifically provided for elsewhere by others.

DEMONSTRATION

The elevator contractor shall make a final check of each elevator operation with the Owner or Owner's representative present prior to turning each elevator over for use. The elevator contractor shall determine that control systems and operating devices are functioning properly.

Notice to the user:
Permission is granted to use this material for only the purpose for which Otis supplies it.
Copyright 2012 by Otis Elevator Co. All rights reserved.
REV 2/20/12

Renaissance Roofing

I N C O R P O R A T E D

"Bringing New Life to Historical Roofing Systems"

P.O. Box 5024 Rockford, IL 61125
2231 Hawkey Drive, Belvidere, IL 61008
Tel 815/547-1725 Fax 815/547-1425
1-800-699-5695
www.claytileroof.com

September 14, 2018

Mr. Dave Luterbach
MSI General
PO Box 7
Oconomowoc, WI 53066

RE: RIVIERA BUILDING, LAKE GENEVA WI

Dear Dave:

Please find the following information on the investigation performed on September 30, 2018. It was limited to observation and did not include any removal of the roofing systems.

Roofing System:

- VandeHey Raleigh Concrete Tile Roofing System in the Spanish Style, installed on a wood batten system
- Flat Seam Copper Roofing system at saddles between 4 towers and main roof. The use of flat seam copper requires special training for the contractor, but will perform for +/- 70 years if installed properly.
- Historical "whirly" vents at saddles should be replaced if required to be in service.
- North and South main roof surfaces have snow and ice guards
- Copper Roof to wall flashings at the clear story are currently tied into the clear story window sills and not a typical detail.
- All existing roof penetrations should be investigated and determine if they are required.
- Clear Story brick walls and the chimney require work and sealing to ensure moisture is not entering at walls
- Windows at the clear story require work to ensure no moisture is allowed in to the system

Guttering:

- "Seamless" 6" K-style copper gutter with hidden hangers 12" on center.
- Existing gutters and downspout appear to be in good condition, and could be considered to be left in place.
- Clear story guttering on west side was clogged with organic materials.
- Gutter expansion joints are installed to help control expansion and contraction problems.
- Square corrugated copper downspouts of various sizes.
- Downspout locations currently drain into grade thru concrete limiting the ability to change current locations.
- 4 downspouts for the clear story roof dump water back out on to the main roofing system. This condition should be changed to keep from concentrating the water discharge. Consideration should be given to removing guttering from the clearstory eaves.

Special Condition:

- Exposed soffits with decorative rafter tails.
- Wood rot was observed on north soffit areas.
- Downspouts on south 2nd floor patio discharge on to patio and is causing problems with ceiling below. Also likely ice hazard in the winter.

Overall assessment:

The roofing and guttering system appear to be in good condition. The current concrete tile roof was likely installed 25-30 years ago. To locate the sources of the leaks mentioned by the owners representative, we recommend performing water tests to isolate the areas. There are not any obvious deficiencies to the systems.

Special consideration should be given to the four copper roofing saddles. These areas are problematic as the current clear story guttering drains to them and they are low sloped. Snow and ice will/is a problem in these areas and an automatic snow/ice melt system should be considered for them. This will then require the guttering and downspouts to have an ice melt system as well to allow water to flow out of the system.

Respectfully Submitted,

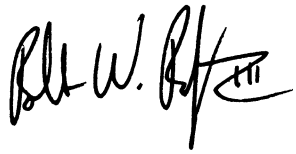

Robert W. Raleigh, III
President

Upon review of the existing systems, as well as the provided recommendation, I would advise the following based on code compliance, energy efficiency, comfort and maintenance. Since this is an iconic and revenue generating facility, I would view these improvements as a long-term investment.

- Installation of a Mitsubishi Variable Refrigerant Flow Water Source Heat Pump. This system allows for a variety of terminal units with varying capacities to be connected. It would eliminate the window air conditioning units and outside condensing units.

- Installation of HDPE piping for heat rejection under the permanent piers utilizing the lake water as a median.

- Installation of Energy Recovery Ventilation and Demand Control Ventilation on economizers for each of the (8) eight upper level systems. Integrate building static pressure control to the variable speed motors installed on the exhaust fans. Windows on each pavilion would need to be modified for installation of intake/exhaust louvers.

- Installation of a high efficiency hot water boiler to supply supplemental heat to radiant heating panels or in-floor heat through out the building. This boiler with the use of a heat exchanger can supply heat for snow/ice melting, as well as domestic hot water heating with use of a buffer tank (If the city multi-system is accepted as an option, domestic hot water heating could be done by the rejected heat – eliminating gas usage in the summer months).

- Wi-Fi Thermostats to alert facility managers of a failure and flexibility of scheduling.

- Installation of a Capture Hood/Exhaust System for the existing dishwasher.

In summary, there are options available. I think a direction or decision needs to be made about this project. Is another stop gap measure going to be taken or is this project going to be a complete update? Some concessions will need to be made in order to address the existing issues. An in-depth analysis can be provided for a sum not to exceed $4,000.00. Some insight into future expectation would narrow the scope.

Trane Comfort Specialists are highly trained heating and air conditioning professionals who can transform indoor air like no one else. They are consistently rated 90% or higher in customer satisfaction surveys. and take great pride in exceeding every customer expectation.

665 S. Kane Street
Burlington, WI 53105
262/763-2573
262/763-3015 (Fax)

www.vorpagel.com