Lake Geneva Utility Commission

Dennis Lyon, President
Josh Gajewski, Utility Director

Jeff Ecklund, Water Superintendent
Ken Bauman, Wastewater Superintendent

361 W. Main Street P.O. Box 187 Lake Geneva, WI 53147 Phone (262) 248-2311
www.lgutilitycommission.com

Regular Lake Geneva Utility Commission Meeting
Wednesday November 20, 2019 4:00 PM
Conference Room 2A, City Hall – 626 Geneva Street

Amended Agenda

Addition of Items 10 & 11

1. Call Meeting to Order
2. Roll Call
3. Comments from the public as allowed by Wis. Statutes §19.84 (2), limited to items on this agenda except for public hearing items. Comments will be limited to 5 minutes.
4. Approve Utility Commission Minutes from October 16, 2019 and October 29, 2019 as prepared and distributed
5. Acknowledgement of Correspondence
6. Financials Update
7. Approval of the October Bills
8. Directors Report
9. Annual Election of Officers
10. Discussion/Action on second amendment to the Stone Ridge Reimbursement Agreement
11. Discussion/Action on participating in the Youth Apprenticeship Program with the Department of Workforce Development
12. Discussion/Action on revised wage scale
13. Discussion/Action on the 2020 Water Utility Budget
14. Discussion/Action on the 2020 Wastewater Utility Budget
15. Discussion/Action on the proposed modifications to their equipment at Host Tower by AT&T
16. Motion to go into closed session pursuant to Wis. Stat. 19.85(1)(e) deliberating or negotiating the purchasing of public properties, the investing of public funds, or conducting other specified public business, whenever competitive or bargaining reasons require a closed session specifically regarding: a) proposal for amendments to the Dodge Tower license with AT&T, and further, pursuant to Wis. Stat. 19.85(1)(c) considering employment, promotion, compensation or performance evaluation data of any public employee over which the governmental body has jurisdiction or exercises responsibility, specifically for b) Wastewater Superintendent and c) Water Superintendent
17. Motion to return to open session pursuant to Wisconsin Statutes 19.85(2) and take action on any items discussed in closed session
18. Adjourn

Requests from persons with disabilities who need assistance to participate in this meeting or hearing should be made to the Lake Geneva Utility Commission at 262-248-2311 in advance, so the appropriate accommodations can be made.

#4

Lake Geneva Utility Commission Minutes
Regular Lake Geneva Utility Commission Meeting
Wednesday October 16, 2019 4:00 PM
Conference Room 2A, City Hall – 626 Geneva Street

Call Meeting to Order- Gajewski called the meeting to order at 4:03pm

Roll Call - Members present: Ann Esarco, Mayor Hartz, Ald. Flower. Ald. Hedlund & Administrator Nord

Staff in attendance: Josh Gajewski & Jo Busch

Public in attendance: Dennis Lyon

Election of Chairperson
Flower/Esarco motion to elect Mayor Hartz as Chairman. No objections.
Hedlund/Flower motion to close nominations and elect Mayor Hartz as chairman of the October 16 Utility Commission meeting. Passed 5-0.

Comments from the public as allowed by Wis. Statutes §19.84 (2), limited to items on this agenda except for public hearing items. Comments will be limited to 5 minutes.
None

Approve Utility Commission Minutes from September 18, 2019 as prepared and distributed
Esarco/Hedlund motion to approve. Passed 5-0.

Acknowledgement of Correspondence
Gajewski distributed hard bound copies of the approved 2018 audit received from Clifton, Larsen, Allen LLP and reported that we had not received expected correspondence from T-Mobile to discuss in closed session.

Financials Update
Gajewski briefly presented the financials through September and it was agreed to discuss them in more detail as part of agenda item 9, budget review.

Approval of the September bills
Hedlund/Esarco motion to approve the September bills. Passed 5-0.

Directors Report
Gajewski reviewed the submitted Directors report. In addition, there was discussion regarding the Big Foot Lift Station and its capacity for growth, the use of our billing software to look up customers at City Hall for issuing parking stickers and beach passes, and the lead abatement to be performed as part of the raising of Dodge Tower.

Esarco/Flower motion to approve the submitted Directors Report. Passed 5-0.

Review of 2020 Budget Drafts & Capital Projects

Gajewski presented the draft 2020 budget including planned capital projects. The draft does not include a wastewater rate increase but does include a 3% water rate increase. Discussion followed. Final budget numbers will be presented at the November meeting.

Hartz/Hedlund motion to go into closed session pursuant to Wis. Stat. 19.85(1) (e) deliberating or negotiating the purchasing of public properties, the investing of public funds, or conducting other specified public business, whenever competitive or bargaining reasons require a closed session specifically regarding a) T-Mobile license agreement revisions, and further, pursuant to Wis. Stat. 19.85(1)(c) considering employment, promotion, compensation or performance evaluation data of any public employee over which the governmental body has jurisdiction or exercises responsibility, specifically for b) annual performance review of Utility Director Josh Gajewski and to include utility staff and Dennis Lyon.

Motion passed on a roll call vote. The Commission convened into closed session at 5:27pm.

Hartz/Hedlund motion to return to open session pursuant to Wisconsin Statutes 19.85(2) and take action on any items discussed in closed session

Motion passed on a roll call vote. The Commission returned to open session at 5:47pm.

Hedlund/Hartz motion to take no action on closed session item a T-Mobile and for item b, to accept the annual performance review of the Utility Director with the changes noted in closed session. Passed 5-0.

Adjourn
Flower/ Hedlund motion to adjourn at 5:48pm. Passed 5-0.

/s/ Jo Busch, Office Manager

THESE MINUTES ARE NOT OFFICIAL UNTIL APPROVED BY THE LAKE GENEVA UTILITY COMMISSION

Lake Geneva Utility Commission Minutes
Special Lake Geneva Utility Commission Meeting
Tuesday October 29, 2019 5:00 PM
Conference Room 2A, City Hall – 626 Geneva Street

Call Meeting to Order- President Lyon called the meeting to order at 5:00pm

Roll Call - Members present: President Lyon, Mayor Hartz, Ald. Flower. Ald. Hedlund & Administrator Nord

Staff in attendance: Josh Gajewski

Public in attendance: Two members of the public.

Comments from the public as allowed by Wis. Statutes §19.84 (2), limited to items on this agenda except for public hearing items. Comments will be limited to 5 minutes.
Mary Jo Fesenmaier – 1085 S. Lakeshore Dr., commented that the packet was not posted on the City's website.

Discussion/Action on approval of Resolution 2019-02 establishing emergency conditions at the Lake Geneva Wastewater Treatment Plant

President Lyon read Resolution 2019-02 aloud and Gajewski provided background on the mechanical issues that have been experienced at the WWTP, specifically within the west secondary clarifier and its related equipment. He presented quotes that had been obtained earlier in the year in preparation for this work to be completed in 2020. Discussion followed regarding the work done in 2018 on the east clarifier, the current scope of work and expected timeline to complete, as well as the availability of funding.

Hedlund/Flower motion to approve Resolution 2019-02. Passed 5-0.

Adjourn
Hedlund/Flower motion to adjourn at 5:18pm. Passed 5-0.

/s/ Josh Gajewski, Utility Director

THESE MINUTES ARE NOT OFFICIAL UNTIL APPROVED BY THE LAKE GENEVA UTILITY COMMISSION

LAKE GENEVA UTILITY COMMISSION

BUDGET COMPARISON THRU: 10 / 2019

WATER UTILITY

REVENUES	2019 Budgeted	YTD	YTD % of 2019 Budget *83.3%*	Same Period 2018	Same Period 2017	Same Period 2016	Same Period 3 Year Avg.	YTD vs. 3 Year Avg.
TOTAL REVENUES	**2,032,249**	**1,696,416**	**83.47%**	**1,646,016**	**1,608,703**	**1,550,881**	**1,601,867**	**94,550**
EXPENSES								
TOTAL SOURCE OF SUPPLY - OPERATION	64,000	47,858	74.78%	50,507	46,674	45,111	47,431	427
TOTAL SOURCE OF SUPPLY - MAINTENANCE	88,900	15,048	16.93%	116,301	9,512	8,397	44,737	-29,689
TOTAL PUMPING EXPENSE - OPERATION	75,450	55,395	73.42%	60,392	69,666	61,011	63,690	-8,295
TOTAL PUMPING EXPENSE - MAINTENANCE	23,200	5,758	24.82%	15,964	11,188	11,758	12,970	-7,213
TOTAL WATER TREATMENT - OPERATION	87,750	77,680	88.52%	72,289	70,662	68,792	70,581	7,099
TOTAL WATER TREATMENT - MAINTENANCE	70,750	58,798	83.11%	57,551	69,179	52,447	59,726	-928
TOTAL TRANS. & DISTRIBUTION - OPERATION	39,300	32,858	83.61%	39,652	33,020	35,705	36,126	-3,268
TOTAL TRANS. & DISTRIBUTION - MAINTENANCE	352,550	152,431	43.24%	132,618	95,756	88,500	105,625	46,806
TOTAL CUSTOMER ACCOUNTS	61,850	50,950	82.38%	50,405	58,807	52,864	54,025	-3,075
TOTAL ADMIN & GENERAL OPERATIONS	515,942	310,307	60.14%	314,381	336,088	400,308	350,259	-39,952
TOTAL OTHER EXPENSES	330,000	260,000	78.79%	269,000	244,800	235,562	249,787	10,213
TOTAL OPERATION & MAINTENANCE EXPENSES	**1,709,692**	**1,067,083**	**62.41%**	**1,179,061**	**1,045,351**	**1,060,458**	**1,094,957**	**-27,874**
REVENUES OVER O&M EXPENSES	**322,557**	**629,333**		**466,955**	**563,352**	**490,423**	**506,910**	
TOTAL CAPITAL OUTLAY	148,550	175,312	118.02%	413,827	350,506	163,006	309,113	0
TOTAL TRANSFERS	171,000	492,134	287.80%	139,932	0	0	34,983	0
TOTAL DEPRECIATION	0	0	0%	0	386,090	0	128,697	0
TOTAL UTILITY ANNUAL EXPENSE	**2,029,242**	**1,734,529**	**85.48%**	**1,732,820**	**1,781,947**	**1,223,464**	**1,567,749**	**-27,874**
BALANCE OF FINANCES	**3,007**	**-38,112**		**-86,804**	**-173,244**	**327,417**	**34,117**	**122,423**

	CURRENT MONTH	PREVIOUS
Fund Cash	647,816	309,092
LGIP 1 Capital Project	373,696	373,086
LGIP 2 Impact Fees	530,172	529,307
LGIP 3 Equipment Replacement	357,412	356,828
INVESTMENT TOTAL	1,261,280	1,259,221
TOTAL	1,909,096	1,568,313

#6

LAKE GENEVA UTILITY COMMISSION

BUDGET COMPARISON THRU: 10 / 2019

WASTEWATER UTILITY

REVENUES	2019 Budgeted	YTD	YTD % of 2019 Budget 83.3%	Same Period 2018	Same Period 2017	Same Period 2016	Same Period 3 Year Avg.	YTD vs. 3 Year Avg.
TOTAL REVENUES	**2,369,948**	**1,738,262**	**73.35%**	**1,491,700**	**1,284,040**	**1,093,912**	**1,289,884**	**448,378**
EXPENSES								
TOTAL OUTSIDE SERVICES	378,750	213,856	56.46%	235,994	207,435	155,150	199,526	14,330
TOTAL OPERATING EXPENSES	40,450	22,555	55.76%	20,181	18,616	26,184	21,660	894
TOTAL INSURANCE	26,857	18,439	68.66%	15,351	22,319	17,081	18,250	189
TOTAL SALARY & BENEFITS	616,101	432,960	70.27%	494,227	455,758	445,013	464,999	-32,039
TOTAL LAB SUPPLIES	21,250	13,818	65.03%	3,950	5,821	10,807	6,859	6,959
TOTAL MISCELLANEOUS EXPENSE	2,250	910	40.43%	700	2,866	1,407	1,658	-748
TOTAL MAINTENANCE	238,000	126,024	52.95%	143,820	88,629	127,819	120,089	5,934
TOTAL OPERATION & MAINTENANCE EXPENSES	**1,323,658**	**828,561**	**62.60%**	**914,222**	**801,443**	**783,461**	**833,042**	**-4,482**
REVENUES OVER O&M EXPENSES	**1,046,290**	**909,701**		**577,478**	**482,598**	**310,451**	**456,842**	**452,859**
TOTAL CAPITAL OUTLAY	401,000	142,082	35.43%	11,169	70,674	1,076,220	386,021	-243,939
TOTAL TRANSFERS	643,750	1,175,363	182.58%	469,545	0	-500,000	-10,152	1,185,515
TOTAL DEPRECIATION	0	0	0.00%	0	0	0	0	0
TOTAL UTILITY ANNUAL EXPENSE	**2,368,408**	**2,146,006**	**90.61%**	**1,394,936**	**872,117**	**1,359,681**	**1,208,912**	**937,094**
BALANCE OF FINANCES	**1,540**	**-407,744**		**96,764**	**411,924**	**-265,769**	**80,973**	

	CURRENT MONTH	PREVIOUS
Fund Cash	842,048	445,261
LGIP 10 Capital Projects	670,545	669,450
LGIP 11 Debt Service	0	0
LGIP12 Impact Fees	597,032	596,057
LGIP 13 Equipment Replacement	916,195	914,699
INVESTMENT TOTAL	2,183,771	2,180,206
TOTAL	3,025,819	2,625,467

Bills over $5K.

#7

Report Criteria:
Detail report.
Invoices with totals above $5000.00 included.
Paid and unpaid invoices included.
Invoice Detail.GL account (2 Characters) = "61","62"

Invoice Number	Invoice Date	Description	GL Account and Title		Net Invoice Amount
61					
MULCAHY/SHAW WATER INC					
322211	10/24/2019	LIGHTNING STRIKE REPLACEM	61-00-00-10700	CONSTRUCTION WORK IN PROCESS	5,235.00
Total MULCAHY/SHAW WATER INC:					5,235.00
ALLIANT ENERGY					
2809540000-1	11/04/2019	201 HASKINS ST SEWER PLAN	61-00-00-52520	UTILTITY-ELECTRICITY-PLANT	12,896.24
Total ALLIANT ENERGY:					12,896.24
Total 61:					18,131.24
62					
ENGINEERING CONSULTING SERVICE, LTD					
764374	11/04/2019	GEOTECH-DODGE TOWER RAI	62-00-00-10700	CONSTRUCTION WORK IN PROCESS	6,860.00
Total ENGINEERING CONSULTING SERVICE, LTD:					6,860.00
WATER WELL SOLUTIONS					
490967	10/21/2019	WELL 4 PULL & REHAB	62-00-00-10700	CONSTRUCTION WORK IN PROCESS	43,240.00
Total WATER WELL SOLUTIONS:					43,240.00
LANE TANK CO., INC					
LANE111219	11/12/2019	CENTER ST TOWER CLEANING	62-00-00-67200	RESERVOIR & STANDPIPES	5,900.00
Total LANE TANK CO., INC:					5,900.00
DOWN TO EARTH CONTRACTORS INC					
7185	11/11/2019	SAGE ABANDONMENT & SERVI	62-00-00-67300	MAINT OF MAINS & VALVES	7,953.91
7185	11/11/2019	SAGE ABANDONMENT & SERVI	62-00-00-67500	MAINT SERVICES & CURB BOX	14,253.09
Total DOWN TO EARTH CONTRACTORS INC:					22,207.00
Total 62:					78,207.00
Grand Totals:					96,338.24

Invoice Number	Invoice Date	Description	GL Account and Title	Net Invoice Amount

Dated: _____

Mayor: _____

City Council: _____

_____

_____

_____

_____

_____

City Recorder: _____

Report Criteria:
Detail report.
Invoices with totals above $5000.00 included.
Paid and unpaid invoices included.
Invoice Detail.GL account (2 Characters) = "61","62"

October Bills.

Report Criteria:
Detail report.
Invoices with totals above $0.00 included.
Paid and unpaid invoices included.
Invoice Detail.GL account (2 Characters) = "61","62"

Invoice Number	Invoice Date	Description	GL Account and Title		Net Invoice Amount
61					
CDW GOVERNMENT INC					
VLQ0377	10/23/2019	WW SHORETEL IP PHONES-INS	61-00-00-10700	CONSTRUCTION WORK IN PROCESS	410.48
Total CDW GOVERNMENT INC:					410.48
CITY ELECTRIC					
LKG/058858	09/26/2019	ASHBROOK SLUDGE CONTROL	61-00-00-10700	CONSTRUCTION WORK IN PROCESS	188.67
Total CITY ELECTRIC:					188.67
DUNN LUMBER					
773957	10/15/2019	CONDUIT & ELEC SUPP-NEW IT	61-00-00-10700	CONSTRUCTION WORK IN PROCESS	24.85
Total DUNN LUMBER:					24.85
ENDRESS & HAUSER					
6002098619	10/16/2019	BAR SCREEN SENSOR "REPLA	61-00-00-10700	CONSTRUCTION WORK IN PROCESS	1,941.73
Total ENDRESS & HAUSER:					1,941.73
LW ALLEN LLC					
100845	10/28/2019	PLC TO PC COMMUNICATION F	61-00-00-10700	CONSTRUCTION WORK IN PROCESS	1,321.98
Total LW ALLEN LLC:					1,321.98
MULCAHY/SHAW WATER INC					
322211	10/24/2019	LIGHTNING STRIKE REPLACEM	61-00-00-10700	CONSTRUCTION WORK IN PROCESS	5,235.00
322226	10/31/2019	NEW FLOW METER INSTALLED	61-00-00-10700	CONSTRUCTION WORK IN PROCESS	823.00
Total MULCAHY/SHAW WATER INC:					6,058.00
VELOCITY					
20190051	11/01/2019	WW INS & PC U/GIS	61-00-00-10700	CONSTRUCTION WORK IN PROCESS	2,043.00
Total VELOCITY:					2,043.00
NORTHERN LAKE SERVICE INC					
366189	10/15/2019	WEEKLY NITROGEN	61-00-00-52100	LABORATORY SERVICES	169.20
366190	10/15/2019	WEEKLY NITROGEN	61-00-00-52100	LABORATORY SERVICES	169.20
366859	10/23/2019	WEEKLY NITROGEN	61-00-00-52100	LABORATORY SERVICES	169.20
367964	11/06/2019	WEEKLY NITROGEN	61-00-00-52100	LABORATORY SERVICES	169.20
368201	11/11/2019	WEEKLY NITROGEN	61-00-00-52100	LABORATORY SERVICES	169.20
Total NORTHERN LAKE SERVICE INC:					846.00
WI STATE LABORATORY OF HYGIENE					
610834	10/31/2019	SLH TESTING COST	61-00-00-52100	LABORATORY SERVICES	412.00
Total WI STATE LABORATORY OF HYGIENE:					412.00

Invoice Number	Invoice Date	Description	GL Account and Title		Net Invoice Amount
KAPUR & ASSOCIATES INC					
99913	10/08/2019	LAKE GARDEN LIFT STATION	61-00-00-52160	ENGINEERING EXPENSE	435.00
Total KAPUR & ASSOCIATES INC:					435.00
WE ENERGIES					
0062-843-645-	10/08/2019	191 HASKINS DEWATERING BUI	61-00-00-52500	UTILITY-GAS-PLANT	20.90
0062-843-645-	11/04/2019	191 HASKINS DEWATERING BUI	61-00-00-52500	UTILITY-GAS-PLANT	199.07
6024-403-732-	11/04/2019	201 HASKINS WWTF-SEWER PL	61-00-00-52500	UTILITY-GAS-PLANT	138.98
8468-292-380-	11/04/2019	191 HASKINS WEST BLDG-STO	61-00-00-52500	UTILITY-GAS-PLANT	96.69
4026-567-004-	11/01/2019	EDGEWOOD DR LIFT STATION	61-00-00-52505	UTILITY-GAS-COLLECTION SYSTEM	11.24
5873-681-278-	10/08/2019	LA GRANGE LIFT STATION	61-00-00-52505	UTILITY-GAS-COLLECTION SYSTEM	10.89
5873-681-278-	11/05/2019	LA GRANGE LIFT STATION	61-00-00-52505	UTILITY-GAS-COLLECTION SYSTEM	14.29
5881-700-273-	10/08/2019	BIG FOOT LIFT STATION	61-00-00-52505	UTILITY-GAS-COLLECTION SYSTEM	11.33
5881-700-273-	11/06/2019	BIG FOOT LIFT STATION	61-00-00-52505	UTILITY-GAS-COLLECTION SYSTEM	12.81
Total WE ENERGIES:					516.20
ALLIANT ENERGY					
1438750000-0	10/08/2019	191 HASKINS ST DEWTRBLD	61-00-00-52520	UTILTITY-ELECTRICITY-PLANT	249.71
1438750000-1	11/01/2019	191 HASKINS ST DEWTRBLD	61-00-00-52520	UTILTITY-ELECTRICITY-PLANT	121.06
2809540000-1	11/04/2019	201 HASKINS ST SEWER PLAN	61-00-00-52520	UTILTITY-ELECTRICITY-PLANT	12,896.24
5077530000-1	11/01/2019	361 W MAIN ST SIGN	61-00-00-52520	UTILTITY-ELECTRICITY-PLANT	68.90
9746710000-1	11/01/2019	361 MAIN ST HALLWAY	61-00-00-52520	UTILTITY-ELECTRICITY-PLANT	110.32
0553610000-1	11/01/2019	361 MAIN ST C C LIFT	61-00-00-52525	UTILTITY-ELECTRICITY-COLL SYS	164.86
1411800000-10	11/01/2019	LAGRANGE DR LIFT STATION	61-00-00-52525	UTILTITY-ELECTRICITY-COLL SYS	270.85
2779710000-1	11/01/2019	MARIANE TER LIFT STATION	61-00-00-52525	UTILTITY-ELECTRICITY-COLL SYS	37.47
3079550000-1	11/01/2019	MAXWELL ST LIFT STATION	61-00-00-52525	UTILTITY-ELECTRICITY-COLL SYS	29.48
3271130000-10	11/01/2019	BAYVIEW DR LIFT STATION	61-00-00-52525	UTILTITY-ELECTRICITY-COLL SYS	51.82
5994110000-10	11/01/2019	361 STATE ROAD 120 BIG FOOT	61-00-00-52525	UTILTITY-ELECTRICITY-COLL SYS	304.04
9629610000-11	11/01/2019	EDGEWOOD DR LIFT STATION	61-00-00-52525	UTILTITY-ELECTRICITY-COLL SYS	174.28
Total ALLIANT ENERGY:					14,479.03
FIRST BANKCARD					
152702192890	10/16/2019	MICROSOFT OFFICE 365 LICEN	61-00-00-53050	COMPUTER EXPENSE	105.49
Total FIRST BANKCARD:					105.49
VELOCITY					
20190050	11/01/2019	MICROSOFT OFFICE 365	61-00-00-53050	COMPUTER EXPENSE	72.00
Total VELOCITY:					72.00
ADVANCE PRINTING INC					
48061	10/23/2019	#10 WINDOW ENVELOPES	61-00-00-53100	OFFICE SUPPLIES EXPENSE	82.50
Total ADVANCE PRINTING INC:					82.50
MARTIN GROUP					
1256145	10/21/2019	SERVICE CONTRACT/COPIES	61-00-00-53100	OFFICE SUPPLIES EXPENSE	97.78
Total MARTIN GROUP:					97.78
OFFICE DEPOT					
391629958001	10/18/2019	CALENDARS PLANNER WIPES	61-00-00-53100	OFFICE SUPPLIES EXPENSE	58.62
393519494001	10/22/2019	PLANNER - CREDIT	61-00-00-53100	OFFICE SUPPLIES EXPENSE	8.49-

Invoice Number	Invoice Date	Description	GL Account and Title	Net Invoice Amount
Total OFFICE DEPOT:				50.13
TIME WARNER CABLE				
719553801102	10/22/2019	INTERNET SVC-OCT	61-00-00-53100 OFFICE SUPPLIES EXPENSE	39.55
Total TIME WARNER CABLE:				39.55
AT&T				
262248231135	10/13/2019	SEPTEMBER TELEPHONE	61-00-00-53110 TELEPHONE EXPENSE	165.27
Total AT&T:				165.27
AT&T LONG DISTANCE				
RE1019	10/04/2019	2622482394-SEP	61-00-00-53110 TELEPHONE EXPENSE	1.87
RE1119	11/04/2019	2622482394-OCT	61-00-00-53110 TELEPHONE EXPENSE	4.56
Total AT&T LONG DISTANCE:				6.43
US CELLULAR				
0334094439	10/04/2019	WWTF MONTHLY PHONE SVC	61-00-00-53110 TELEPHONE EXPENSE	113.35
Total US CELLULAR:				113.35
FURGER, DEREK				
FURGER11201	11/07/2019	MEAL REIMBURSEMENT-DNR T	61-00-00-53310 MEALS, LODGING, ETC	11.96
Total FURGER, DEREK:				11.96
KOEHN, MATTHEW				
KOEHN112019	11/04/2019	BIOSOLIDS/SLUDGE WW CLAS	61-00-00-53310 MEALS, LODGING, ETC	20.29
KOEHN112019	11/04/2019	BIOSOLIDS/SLUDGE WW CLAS	61-00-00-53320 CONFERENCES & SCHOOL	346.58
Total KOEHN, MATTHEW:				366.87
DUNN LUMBER				
773458	10/10/2019	MAGNET TO RETRIEVE STUFF I	61-00-00-53500 OPERATIONS TOOLS & EQUIP	10.85
774904	10/25/2019	SNAP RING PLIERS-SHOP TOO	61-00-00-53500 OPERATIONS TOOLS & EQUIP	15.74
Total DUNN LUMBER:				26.59
CINTAS CORP				
5015114445	10/30/2019	FIRST AID SUPPLIES	61-00-00-53900 FIRST AID & SAFETY SUPPLIES	52.96
Total CINTAS CORP:				52.96
DUNN LUMBER				
775894	11/05/2019	P.P.E. LEATHER GLOVES	61-00-00-53900 FIRST AID & SAFETY SUPPLIES	11.68
Total DUNN LUMBER:				11.68
USA BLUE BOOK				
036284	10/11/2019	FIBER FILTERS & BOD BUFFER	61-00-00-64000 LABORATORY SUPPLIES	214.20
045226	10/22/2019	INSPECTION LABEL	61-00-00-64000 LABORATORY SUPPLIES	16.56
Total USA BLUE BOOK:				230.76

Invoice Number	Invoice Date	Description	GL Account and Title		Net Invoice Amount
WALMART COMMUNITY					
006447	10/14/2019	BLEACH/PAPER TOWEL	61-00-00-64000	LABORATORY SUPPLIES	45.64
02090	08/29/2019	LAB SINK CLEANER/BLEACH	61-00-00-64000	LABORATORY SUPPLIES	6.80
006447	10/14/2019	BATTERIES/PENS/COFFEE/STE	61-00-00-65000	OTHER OPERATING SUPPLIES-KITCH	94.74
02090	08/29/2019	BOWLS/SOAP/TP/LAUNDRY SO	61-00-00-65000	OTHER OPERATING SUPPLIES-KITCH	40.17
Total WALMART COMMUNITY:					187.35
USA BLUE BOOK					
036284	10/11/2019	NON-POTABLE SIGNS	61-00-00-65500	MAINT OF OTHER PLANT	49.32
045226	10/22/2019	NON-POTABLE SIGNS	61-00-00-65500	MAINT OF OTHER PLANT	141.00
Total USA BLUE BOOK:					190.32
MUTUAL OF OMAHA					
001021544623	10/20/2019	WWTF DISABILITY-NOV	61-00-00-92625	LONG TERM DISABILITY	93.05
Total MUTUAL OF OMAHA:					93.05
SECURIAN FINANCIAL GROUP					
NOV-UTIL	10/20/2019	INV099018-NOV LIFE INS	61-00-00-92630	LIFE INSURANCE EXPENSE	53.29
Total SECURIAN FINANCIAL GROUP:					53.29
BONK, JASON					
BONK112019	11/07/2019	STEEL TOE BOOT REIMBURSE	61-00-00-92650	UNIFORM/CLOTHING EXPENSE	100.00
Total BONK, JASON:					100.00
CINTAS CORPORATION LOC 447					
4031395515	10/01/2019	WWTF UNIFORMS	61-00-00-92650	UNIFORM/CLOTHING EXPENSE	65.22
4031903333	10/08/2019	WWTF UNIFORMS	61-00-00-92650	UNIFORM/CLOTHING EXPENSE	65.22
4032457104	10/15/2019	WWTF UNIFORMS	61-00-00-92650	UNIFORM/CLOTHING EXPENSE	65.22
4033017590	10/22/2019	WWTF UNIFORMS	61-00-00-92650	UNIFORM/CLOTHING EXPENSE	65.22
4033595650	10/29/2019	WWTF UNIFORMS	61-00-00-92650	UNIFORM/CLOTHING EXPENSE	65.22
Total CINTAS CORPORATION LOC 447:					326.10
PFI FASHIONS					
1135	10/10/2019	UNIFORMS	61-00-00-92650	UNIFORM/CLOTHING EXPENSE	349.00
1375	11/05/2019	UC SHIRTS	61-00-00-92650	UNIFORM/CLOTHING EXPENSE	236.52
Total PFI FASHIONS:					585.52
DUNN LUMBER					
775894	11/05/2019	SEALANT -MAINT SUPP LAB BL	61-00-00-93500	MAINT-LAB BLDG	6.12
Total DUNN LUMBER:					6.12
UNITED LABORATORIES					
INV268880	10/08/2019	ODOR FIGHTER-HEADWORKS	61-00-00-93601	MAINT-HEADWORKS EQUIP	299.14
Total UNITED LABORATORIES:					299.14
BUMPER TO BUMPER AUTO PARTS					
662-416173	10/17/2019	DRIVE #3 BELT	61-00-00-93603	MAINT-PROCESS EQUIP	126.76

Invoice Number	Invoice Date	Description	GL Account and Title	Net Invoice Amount
Total BUMPER TO BUMPER AUTO PARTS:				126.76
CITY ELECTRIC				
LKG/059249	10/10/2019	VFD#3 mAINT (DITCH DRIVE) O	61-00-00-93603 MAINT-PROCESS EQUIP	153.90
Total CITY ELECTRIC:				153.90
DUNN LUMBER				
774262	10/18/2019	QUICK LINKS-CAMEL #55-HOSE	61-00-00-93700 MAINT-VEHICLES & EQUIP	10.98
Total DUNN LUMBER:				10.98
ITU ABSORB TECH INC				
7341599	10/18/2019	SHOP RAGS	61-00-00-93700 MAINT-VEHICLES & EQUIP	30.28
Total ITU ABSORB TECH INC:				30.28
SEWER EQUIPMENT OF ILLINOIS LLC				
0000002004	10/28/2019	#55 CAMEL MAINT	61-00-00-93700 MAINT-VEHICLES & EQUIP	87.29
Total SEWER EQUIPMENT OF ILLINOIS LLC:				87.29
UNITED LABORATORIES				
INV268880	10/08/2019	CAR SHAMPOO-CAR WASH	61-00-00-93700 MAINT-VEHICLES & EQUIP	209.40
Total UNITED LABORATORIES:				209.40
ADAMS ELECTRIC INC				
1171	10/23/2019	BIG FOOT LIFT STATION-GENE	61-00-00-93800 MAINT-LIFT STATIONS	375.00
Total ADAMS ELECTRIC INC:				375.00
CITY ELECTRIC				
LKG/003274	10/10/2019	CREDIT-GENERATOR TRANSFE	61-00-00-93800 MAINT-LIFT STATIONS	60.00-
LKG/059359	10/16/2019	GENERATOR @ BIG FOOT TRA	61-00-00-93800 MAINT-LIFT STATIONS	77.60
Total CITY ELECTRIC:				17.60
PATS SERVICES INC				
847152	10/05/2019	PUMPING LIFT STATION-CC LS	61-00-00-93800 MAINT-LIFT STATIONS	990.00
Total PATS SERVICES INC:				990.00
WALMART COMMUNITY				
006446	10/14/2019	GENEVA BAY LIFT STATION BAT	61-00-00-93800 MAINT-LIFT STATIONS	44.88
Total WALMART COMMUNITY:				44.88
ALLIANT ENERGY				
2524220000-11	11/01/2019	E STATE ROAD 50 GATE	61-00-00-93820 MAINT-RECEIVING STATION	18.91
0548850000-1	11/01/2019	E STATE ROAD 50 SEEPAGE	61-00-00-93830 MAINT-SEEPAGE CELLS/POND	119.24
Total ALLIANT ENERGY:				138.15
DAVID ADAMS				
56	10/29/2019	OCT-CHISEL PLOW SEPTIC CE	61-00-00-93830 MAINT-SEEPAGE CELLS/POND	1,350.00

Invoice Number	Invoice Date	Description	GL Account and Title		Net Invoice Amount
Total DAVID ADAMS:					1,350.00
DUNN LUMBER					
774146	10/17/2019	CONDUIT ADAPTER REDUCER	61-00-00-93840	MAINT-CLARIFIER	19.58
775529	10/31/2019	SUBMERSIBLE PUMP-WEST CL	61-00-00-93840	MAINT-CLARIFIER	166.49
Total DUNN LUMBER:					186.07
Total 61:					35,671.46
62					
DIXON ENGINEERING INC					
19-5958	11/05/2019	DODGE TOWER RAISING-CARR	62-00-00-10700	CONSTRUCTION WORK IN PROCESS	1,729.50
Total DIXON ENGINEERING INC:					1,729.50
ENGINEERING CONSULTING SERVICE, LTD					
764374	11/04/2019	GEOTECH-DODGE TOWER RAI	62-00-00-10700	CONSTRUCTION WORK IN PROCESS	6,860.00
Total ENGINEERING CONSULTING SERVICE, LTD:					6,860.00
MSA PROFESSIONAL SERVICES INC					
2-R07815004.0	10/11/2019	DODGE TOWER RAISING	62-00-00-10700	CONSTRUCTION WORK IN PROCESS	1,508.43
Total MSA PROFESSIONAL SERVICES INC:					1,508.43
VELOCITY					
20190051	11/01/2019	WW INS & PC U/GIS	62-00-00-10700	CONSTRUCTION WORK IN PROCESS	353.50
Total VELOCITY:					353.50
WATER WELL SOLUTIONS					
490967	10/21/2019	WELL 4 PULL & REHAB	62-00-00-10700	CONSTRUCTION WORK IN PROCESS	43,240.00
Total WATER WELL SOLUTIONS:					43,240.00
CORE & MAIN LP					
L429986	10/29/2019	CAP, BORED CHARGE, RESTRA	62-00-00-15000	MATERIAL-SUPPLIES	168.14
Total CORE & MAIN LP:					168.14
MARTELLE WATER TREATMENT					
19116	10/30/2019	BLEACH @ WELLHOUSES	62-00-00-60200	CHEMICALS	649.64
Total MARTELLE WATER TREATMENT:					649.64
ALLIANT ENERGY					
1455110000-10	11/01/2019	361 MAIN ST WELL 2	62-00-00-60300	MISC EXPENSES & UTILITY	1,348.35
3483700000-1	11/05/2019	WAVERLY ST WELL 3	62-00-00-60300	MISC EXPENSES & UTILITY	548.18
9727450000-1	11/01/2019	HASKINS ST WELL 5	62-00-00-60300	MISC EXPENSES & UTILITY	707.12
Total ALLIANT ENERGY:					2,603.65
WE ENERGIES					
4410-883-577-	11/04/2019	WAVERLY ST PUMP HOUSE-WE	62-00-00-60300	MISC EXPENSES & UTILITY	10.23
5271-603-363-	10/07/2019	216 HASKINS WELLHOUSE# 5	62-00-00-60300	MISC EXPENSES & UTILITY	9.57

Invoice Number	Invoice Date	Description	GL Account and Title	Net Invoice Amount
5271-603-363-	11/04/2019	216 HASKINS WELLHOUSE# 5	62-00-00-60300 MISC EXPENSES & UTILITY	22.05
Total WE ENERGIES:				41.85
DUNN LUMBER				
774031	10/16/2019	CONNECTOR-WELL #4 VFD INS	62-00-00-61400 WELLS MAINTENANCE	7.72
Total DUNN LUMBER:				7.72
HOME DEPOT CREDIT				
4026156	09/26/2019	AIR RELEASE VALVES WELLHO	62-00-00-61400 WELLS MAINTENANCE	36.86
Total HOME DEPOT CREDIT:				36.86
ALLIANT ENERGY				
3479620000-1	11/01/2019	DODGE ST BOOSTER	62-00-00-62300 PUMPING POWER PURCHASED	82.88
5764250000-1	11/04/2019	361 MAIN ST ENG RM	62-00-00-62300 PUMPING POWER PURCHASED	4,509.47
7170610000-0	10/08/2019	1401 CENTER ST BOOSTER	62-00-00-62300 PUMPING POWER PURCHASED	341.19
7170610000-1	11/01/2019	1401 CENTER ST BOOSTER	62-00-00-62300 PUMPING POWER PURCHASED	473.24
Total ALLIANT ENERGY:				5,406.78
WE ENERGIES				
3047-052-436-	10/04/2019	CENTER STREET BOOSTER ST	62-00-00-62300 PUMPING POWER PURCHASED	13.10
3047-052-436-	11/04/2019	CENTER STREET BOOSTER ST	62-00-00-62300 PUMPING POWER PURCHASED	17.97
3478-672-073-	11/04/2019	361 MAIN WATER DEPT MAIN B	62-00-00-62300 PUMPING POWER PURCHASED	161.16
Total WE ENERGIES:				192.23
MARTELLE WATER TREATMENT				
19081	10/24/2019	CHLORINE TREATMENT PLANT	62-00-00-64100 CHEMICALS	777.00
Total MARTELLE WATER TREATMENT:				777.00
ALLIANT ENERGY				
9746710000-1	11/01/2019	361 MAIN ST HALLWAY	62-00-00-64200 LABOR & EXPENSES (LAB)	110.32
Total ALLIANT ENERGY:				110.32
NCL OF WISCONSIN				
430307	10/21/2019	NON-SELECTIVE MEDIA-TRYPT	62-00-00-64200 LABOR & EXPENSES (LAB)	51.52
Total NCL OF WISCONSIN:				51.52
USA BLUE BOOK				
025730	10/01/2019	REAGENTS (PHOSPHATE, PHO	62-00-00-64200 LABOR & EXPENSES (LAB)	383.94
Total USA BLUE BOOK:				383.94
WI STATE LABORATORY OF HYGIENE				
611077	10/31/2019	ANNUAL PROFICIENCY TESTIN	62-00-00-64200 LABOR & EXPENSES (LAB)	467.00
611244	10/31/2019	FLOURIDE SPLIT SAMPLE	62-00-00-64200 LABOR & EXPENSES (LAB)	26.00
Total WI STATE LABORATORY OF HYGIENE:				493.00
DUNN LUMBER				
773831	10/14/2019	SPRAY PAINT & DUCK TAPE	62-00-00-65100 PLANT MAINTENANCE	13.48

Invoice Number	Invoice Date	Description	GL Account and Title	Net Invoice Amount
Total DUNN LUMBER:				13.48
HOME DEPOT CREDIT				
4012161	09/26/2019	GALV HARDWARE CLOTH-PLA	62-00-00-65100 PLANT MAINTENANCE	9.48
8162444	09/12/2019	REPLACEMENT BALLASTS FOR	62-00-00-65100 PLANT MAINTENANCE	52.56
Total HOME DEPOT CREDIT:				62.04
ALLIANT ENERGY				
0984330000-0	10/08/2019	750 WILD RIDGE DR WTR TOW	62-00-00-66100 MAINT OPS-STANDPIPES	104.00
0984330000-1	11/01/2019	750 WILD RIDGE DR WATER TO	62-00-00-66100 MAINT OPS-STANDPIPES	91.33
5201710000-1	11/01/2019	1887 DODGE ST TOWER	62-00-00-66100 MAINT OPS-STANDPIPES	51.84
Total ALLIANT ENERGY:				247.17
CORRPRO COMPANIES INC				
578682	10/31/2019	MAINT/INSPECTION FOR CATH	62-00-00-66100 MAINT OPS-STANDPIPES	1,130.00
Total CORRPRO COMPANIES INC:				1,130.00
WISCONN VALLEY MEDIA GROUP				
20864-1	11/03/2019	HYD FLUSH NOTICE	62-00-00-66200 TRANS & DISTRIBUTION-FLUSHING	141.00
Total WISCONN VALLEY MEDIA GROUP:				141.00
KAESTNER AUTO ELECTRIC CO				
333575	11/04/2019	SAFETY LIGHT BAR FOR NEW	62-00-00-66500 MISC EXPENSE LICENSE & TOOLS	299.00
Total KAESTNER AUTO ELECTRIC CO:				299.00
MKCELLULAR INC				
MKCLGIN1392	11/12/2019	ECKLUND WORK PHONE SCRE	62-00-00-66500 MISC EXPENSE LICENSE & TOOLS	12.32
Total MKCELLULAR INC:				12.32
LANE TANK CO., INC				
LANE111219	11/12/2019	CENTER ST TOWER CLEANING	62-00-00-67200 RESERVOIR & STANDPIPES	5,900.00
Total LANE TANK CO., INC:				5,900.00
CORE & MAIN LP				
L429986	10/29/2019	SAGE ABANDONMENT	62-00-00-67300 MAINT OF MAINS & VALVES	168.14
L463660	11/01/2019	SAGE VALVE TIE IN NEW	62-00-00-67300 MAINT OF MAINS & VALVES	650.00
L463964	11/01/2019	SAGE NEW VALVE TIE IN	62-00-00-67300 MAINT OF MAINS & VALVES	1,983.47
Total CORE & MAIN LP:				2,801.61
DOWN TO EARTH CONTRACTORS INC				
7185	11/11/2019	SAGE ABANDONMENT & SERVI	62-00-00-67300 MAINT OF MAINS & VALVES	7,953.91
Total DOWN TO EARTH CONTRACTORS INC:				7,953.91
MERIT ASPHALT INC				
91664	10/15/2019	VALVE BOX REPAIR ROAD PAT	62-00-00-67300 MAINT OF MAINS & VALVES	1,042.00

Invoice Number	Invoice Date	Description	GL Account and Title	Net Invoice Amount
Total MERIT ASPHALT INC:				1,042.00
OTTO JACOBS				
120269	11/11/2019	SAGE ABANDONMENT	62-00-00-67300 MAINT OF MAINS & VALVES	640.00
Total OTTO JACOBS:				640.00
USA BLUE BOOK				
029866	10/04/2019	NPT ADAPTER-HYDRANT FLUS	62-00-00-67300 MAINT OF MAINS & VALVES	76.80
Total USA BLUE BOOK:				76.80
DOWN TO EARTH CONTRACTORS INC				
7185	11/11/2019	SAGE ABANDONMENT & SERVI	62-00-00-67500 MAINT SERVICES & CURB BOX	14,253.09
Total DOWN TO EARTH CONTRACTORS INC:				14,253.09
CINTAS CORPORATION LOC 447				
4031395515	10/01/2019	WATER UNIFORMS	62-00-00-90200 METER READING EXPENSE	62.19
4031903333	10/08/2019	WATER UNIFORMS	62-00-00-90200 METER READING EXPENSE	62.19
4032457104	10/15/2019	WATER UNIFORMS	62-00-00-90200 METER READING EXPENSE	62.19
4033017590	10/22/2019	WATER UNIFORMS	62-00-00-90200 METER READING EXPENSE	62.19
4033595650	10/29/2019	WATER UNIFORMS	62-00-00-90200 METER READING EXPENSE	62.19
Total CINTAS CORPORATION LOC 447:				310.95
ADVANCE PRINTING INC				
48061	10/23/2019	#10 WINDOW ENVELOPES	62-00-00-92100 OFFICE SUPPLIES & EXPENSE	82.50
Total ADVANCE PRINTING INC:				82.50
AT&T				
262248231135	10/13/2019	SEPTEMBER TELEPHONE	62-00-00-92100 OFFICE SUPPLIES & EXPENSE	165.28
Total AT&T:				165.28
AT&T LONG DISTANCE				
RE1019	10/04/2019	2622480589-SEP	62-00-00-92100 OFFICE SUPPLIES & EXPENSE	.15
RE1019	10/04/2019	2622483211-SEP	62-00-00-92100 OFFICE SUPPLIES & EXPENSE	16.19
RE1119	11/04/2019	2622480589-OCT	62-00-00-92100 OFFICE SUPPLIES & EXPENSE	.12
RE1119	11/04/2019	2622483211-OCT	62-00-00-92100 OFFICE SUPPLIES & EXPENSE	15.68
Total AT&T LONG DISTANCE:				32.14
LANDON HART				
HART112019	11/04/2019	WATER SYSTEM OPERATIONS	62-00-00-92100 OFFICE SUPPLIES & EXPENSE	1,215.09
Total LANDON HART:				1,215.09
MARTIN GROUP				
1256145	10/21/2019	SERVICE CONTRACT/COPIES	62-00-00-92100 OFFICE SUPPLIES & EXPENSE	97.77
Total MARTIN GROUP:				97.77
OFFICE DEPOT				
391629958001	10/18/2019	CALENDARS PLANNER WIPES	62-00-00-92100 OFFICE SUPPLIES & EXPENSE	58.63

Invoice Number	Invoice Date	Description	GL Account and Title	Net Invoice Amount
393519494001	10/22/2019	PLANNER - CREDIT	62-00-00-92100 OFFICE SUPPLIES & EXPENSE	8.50-
Total OFFICE DEPOT:				50.13
TIME WARNER CABLE				
719553801102	10/22/2019	INTERNET SVC-OCT	62-00-00-92100 OFFICE SUPPLIES & EXPENSE	39.55
Total TIME WARNER CABLE:				39.55
US CELLULAR				
0334094439	10/04/2019	WATER MONTHLY PHONE SVC	62-00-00-92100 OFFICE SUPPLIES & EXPENSE	113.35
Total US CELLULAR:				113.35
VELOCITY				
20190050	11/01/2019	MICROSOFT OFFICE 365	62-00-00-92100 OFFICE SUPPLIES & EXPENSE	72.00
Total VELOCITY:				72.00
DIXON ENGINEERING INC				
19-6007	11/07/2019	ATT/SAC REVIEW	62-00-00-92300 OUTSIDE SERVICES EMPLOYED	1,450.00
Total DIXON ENGINEERING INC:				1,450.00
STAFFORD ROSENBAUM LLP				
1229890	10/17/2019	SAILBOAT PLAZA	62-00-00-92300 OUTSIDE SERVICES EMPLOYED	650.00
Total STAFFORD ROSENBAUM LLP:				650.00
MUTUAL OF OMAHA				
001021544623	10/20/2019	UTIL DISABILITY-NOV	62-00-00-92625 LONG TERM DISABILITY	110.64
Total MUTUAL OF OMAHA:				110.64
SECURIAN FINANCIAL GROUP				
NOV-UTIL	10/20/2019	INV099018-NOV LIFE INS	62-00-00-92630 LIFE INSURANCE EXPENSE	101.40
Total SECURIAN FINANCIAL GROUP:				101.40
PUBLIC SERVICE COMMISSION				
1910-I-02980	11/12/2019	SIMPLIFIED RATE CASE	62-00-00-92800 REGULATORY COMMISSION EXPENSE	39.83
Total PUBLIC SERVICE COMMISSION:				39.83
CINTAS CORP				
5015114444	10/30/2019	FIRST AID SUPPLIES	62-00-00-93000 MISCELLANEOUS GENERAL EXP	133.32
Total CINTAS CORP:				133.32
PFI FASHIONS				
1135	10/10/2019	UNIFORMS	62-00-00-93000 MISCELLANEOUS GENERAL EXP	357.40
1375	11/05/2019	UC SHIRTS	62-00-00-93000 MISCELLANEOUS GENERAL EXP	236.52
Total PFI FASHIONS:				593.92
DUNN LUMBER				
K75764	11/01/2019	EXT CORD, HASP, AERATOR-MI	62-00-00-93200 MAINTENANCE OF GENERAL PLANT	65.80

Invoice Number	Invoice Date	Description	GL Account and Title	Net Invoice Amount
Total DUNN LUMBER:				65.80
WALMART COMMUNITY				
007584	10/04/2019	VACUUM CLEANER	62-00-00-93200 MAINTENANCE OF GENERAL PLANT	84.00
Total WALMART COMMUNITY:				84.00
Total 62:				104,594.17
Grand Totals:				140,265.63
			Customer Refund +	156.53
				140,422.16

Dated: _____

Mayor: _____

City Council: _____

_____

_____

_____

_____

_____

City Recorder: _____

Report Criteria:
Detail report.
Invoices with totals above $0.00 included.
Paid and unpaid invoices included.
Invoice Detail.GL account (2 Characters) = "61","62"

Lake Geneva Utility Commission

#8

Dennis Lyon, President
Josh Gajewski, Utility Director

Jeff Ecklund, Water Superintendent
Ken Bauman, Wastewater Superintendent

361 W. Main Street P.O. Box 187 Lake Geneva, WI 53147 Phone (262) 248-2311
www.lgutilitycommission.com

TO: Lake Geneva Utility Commission
FROM: Josh Gajewski, Utility Director
SUBJECT: November 2019 Director's Report

OPERATIONS UPDATE

Water Operations

Work continues with the Dodge Tower project in the design phase. We have held the kickoff meeting with the cell carriers and are working toward a location for the temporary pole(s) installation during the project, along with the design for the reinstallation of a handrail. We remain on schedule to release the project manual in late November and have received a recommendation from the Public Works Committee to distribute funds in excess of $250,000 to complete the project, which will be discussed further at Council on November 18th.

Rehabilitation work for Well #4 is nearing completion, with the upcoming work including the pump test to ensure the capacity has been restored to historic levels. Pending that outcome, additional work will be evaluated in an effort to restore the well's capacity.

The abandonment of the water main on Sage St., between Haskins and Spring St. has been completed, along with the removal and installation of three utility side services on the segment. We await the HMA patches to complete this work before the end of the construction season.

We have received approval from the PSC for the Simplified Rate Case and customers will be notified of the new rates on November 14th in the Lake Geneva Regional News.

Wastewater Operations

The CCTV work scheduled for this year has been completed and we await the submittal of the finalized reports, which will be incorporated into the 2020 budget requests as found necessary.

Work has been completed that was necessary to update the pump controls at the Covenant Harbor lift station. We have a preliminary schedule of November 23rd to have work completed at the Big Foot lift station to resolve similar control issues experienced in August of this year.

The repairs to the west clarifier have started and the equipment is expected to be removed by November 15th. A review of the condition will then begin, with any necessary refurbishments taking place afterward. Our goal is to have the clarifier back in service in late December – early January.

Office & Administration Operations

The primary focus of activities this month continues to be the 2020 operational budgets, which is on the agenda for approval in November. Additionally, staff is working to process delinquent accounts prior to placing past due balances on the tax roll.

10. Revised Wage Scale for the Utility Commission

As drafted, the wage scale includes a 2.5% increase, which was recently passed by Council and is scheduled to become effective January 1, 2020. The revisions include a max pay rate for operational personnel that remains the same as it was amended in February 2019.

> **Action is recommended to approve the revised wage scale as presented, to become effective January 1, 2020.**

11. 2020 Water Utility Budget

Staff has drafted a requested budget for O&M and Capital Projects in the 2020 operational year. As summarized, the budget is prepared for Commission review, input and approval.

> **Action is recommended to approve the 2020 Water Utility budget.**

12. 2020 Wastewater Utility Budget

Staff has drafted a requested budget for O&M and Capital Projects in the 2020 operational year. As summarized, the budget is prepared for Commission review, input and approval.

> **Action is recommended to approve the 2020 Water Utility budget.**

13. AT&T Upgrades at Host Tower

As presented, the proposed upgrades to the AT&T facilities at Host Tower have been reviewed by Utility Staff and Dixon Engineering, with recommendations/requests presented in the accompanying report prepared by Dixon Engineering.

> **Action is recommended to approve the upgrades to the AT&T facilities at Host Tower, conditioned upon compliance with the itemized requests in the Dixon Engineering report.**

14. Closed Session

Staff will present information for further consideration on the noticed items.

#10

SECOND AMENDMENT

TO

REIMBURSEMENT AGREEMENT

This Second Amendment to Reimbursement Agreement is made the _____ day of _____, 2019, among the CITY OF LAKE GENEVA, Walworth County, Wisconsin ("City"), the LAKE GENEVA UTILITY COMMISSION, Walworth County, Wisconsin ("Utility Commission"), and FAIRWYN, LTD., a Wisconsin corporation, Walworth County, Wisconsin ("Developer").

RECITALS

A. WHEREAS, the City, the Utility Commission, and the Developer, entered into a Reimbursement Agreement dated August 28, 2003 ("Original Agreement"), amended by the First Amendment to Reimbursement Agreement ("Amended Agreement")(collectively "Reimbursement Agreement"), providing for, among other things, the construction of the Water Tower Facilities described thereunder to serve, in part, Phases II and III of Stone Ridge Subdivision ("Subdivision"), and further provides for reimbursement to the Developer of the Developer's Share of Cost of such construction by credit and payment of Water Impact Fees and Special Assessments in the Subdivision;

B. WHEREAS, the Water Tower Facilities have been constructed;

C. WHEREAS, Phase I of the Subdivision has been completed;

D. WHEREAS, the Developer is beginning the Phase II of the Subdivision and desires to be reimbursed for its costs attributed to the construction of water tower facilities; and'

E. WHEREAS, SHODEEN CONSTRUCTION COMPANY, L.L.C., an Illinois limited liability company, STONE RIDGE DEVELOPMENT GROUP L.L.C., a Delaware limited liability company, FAIRWYN DEVELOPMENT CORPORATION, a Wisconsin corporation, and STONE RIDGE OF LAKE GENEVA, LLC, a Delaware limited liability company, have an interest in the subject property and desire to waive notice and hearing requirements for the special

assessments under Wis. Stat. § 66.0703(7)(b).

F. WHEREAS, the parties desire to amend the Reimbursement Agreement to clarify its terms and waive the necessity to recover interest from the City on the repayment identified therein;

NOW, THEREFORE, the City, the Utility Commission, and the Developer enter into this Second Amendment to the Reimbursement Agreement ("Second Amendment") on the date first set forth above and agree as follows:

1. Section 1 shall read as follows:

The Recitals set forth hereinabove are restated in the text of this Agreement by reference as if set forth in full herein, and as such constitute agreements by and between the parties made part and parcel of this Second Amendment.

2. Section 4, entitled Special Assessment, of the Amended Agreement shall deleted and replaced as follows:

> The forty-three (43) lots of the Subdivision identified as Phase I Lots and not subject to the Special Assessment under subsec. 3.04b of the Reimbursement Agreement are Lots fifty (50) through fifty-eight (58), all inclusive, Lots sixty-three (63) through seventy-one (71), all inclusive, Lots eighty-two (82) through eighty-five (85), all inclusive, and Lots eighty-seven (87) through one hundred seven (107), all inclusive. The remaining Phase I Lots total fifty (50) units, each being subject to an Impact Fee, because included among the units being counted are seven (7) duplex lots.
>
> The lots also subject to the Special Assessment and identified as Phase II or Phase III Lots include Lots one (1) through forty-eight (48), all inclusive, Lots seventy-seven (77) through eighty (80), all inclusive, and Lots one hundred nine (109) through one hundred thirty-one (131), all inclusive, one hundred thirty-four (134) through one hundred sixty-eight (168), all inclusive. These one hundred ten (110) units in Phase II and Phase III shall be subject to the Special Assessment. The Special Assessment shall be composed of the Net Developer's Share and shall be collected at the time of building permit application for each Phase II and Phase III unit. The Net Developer's Share for Phase II or Phase III unit shall be Three Thousand Five Hundred and no/100 ($3,500.00) Dollars for each unit in which a building permit is submitted. The collected Net Developer's Share shall be provided to the Developer within thirty (30) days of receipt of all building permit and impact fees by the City.
>
> No interest shall be applied and any prior reference to the seven (7%) interest shall be deemed null and void. The Developer and any other

owner of a Unit hereby waive notice and hearing requirements for the special assessments under Wis. Stat. § 66.0703(7)(b).

3. All other terms, conditions, and provisions of said Second Amendment shall remain in full force and effect, except as amended herein. This Second Amendment as provided hereinabove shall be incorporated into the Reimbursement Agreement as though fully set forth herein. The undersigned parties execute this Second Amendment on behalf of themselves and their successors and assigns. This Second Amendment may be executed in counterparts and all so executed shall constitute one and the same agreement.

IN WITNESS WHEREOF, the undersigned have duly executed and delivered this instrument effective as of _____, ___, 2019.

CITY OF LAKE GENEVA

By: _____
Tom Hartz, Mayor

Attest: _____
Lana Kropf, City Clerk

FAIRWYN, LTD.

By: _____
Brian C. Pollard, President

APPROVAL OF COMMON COUNCIL

This Second Amendment was approved by the Common Council of the City of Lake Geneva by Resolution dated the ___ day of _____, 2019.

LAKE GENEVA
UTILITY COMMISSION

By: _____
Dennis Lyon, President

This Document drafted by:
CLAIR, THOMPSON & POLLARD, S.C.
Attorney Charles. W. Pollard IV
617 East Walworth Avenue
Delavan, Wisconsin 53115-0445
Telephone: (262) 728-9196

E-mail: cpollard@clairlawoffices.com
www.clairlaw.com

CONSENT AND WAIVER OF NOTICE

SHODEEN CONSTRUCTION COMPANY, L.L.C., an Illinois limited liability company, **STONE RIDGE DEVELOPMENT GROUP L.L.C.**, a Delaware limited liability company, **FAIRWYN DEVELOPMENT CORPORATION**, a Wisconsin corporation, and **STONE RIDGE OF LAKE GENEVA, LLC**, a Delaware limited liability company, as owners of Units in the Subdivision hereby consent to the imposition of the special assessment set forth in the Second Amendment to Reimbursement Agreement between Fairwyn Development Corporation and the City of Lake Geneva dated _____ and waive any notice and hearing requirements for the special assessments under Wis. Stat. § 66.0703(7)(b).

SHODEEN CONSTRUCTION COMPANY, L.L.C.,
an Illinois limited liability company

By: _____

STONE RIDGE DEVELOPMENT GROUP L.L.C.,
a Delaware limited liability company

Shodeen Group, L.L.C.,
a Delaware limited liability company,
manager of Stone Ridge Development, L.L.C.

Tri-City Land Management Company, L.L.C.,
an Illinois limited liability company,
manager of Shodeen Group, L.L.C.

_____
Craig A. Shodeen, Manager
of Tri-City Land Management Company, L.L.C.

_____
Anna B. Harmon, Manager
of Tri-City Land Management Company, L.L.C.

_____
Beth C. Shodeen, Manager
of Tri-City Land Management Company, L.L.C.

FAIRWYN DEVELOPMENT CORPORATION,
A Wisconsin corporation

_____
Brian C. Pollard, President

STONE RIDGE OF LAKE GENEVA, LLC,
a Delaware limited liability company

FAIRWYN REAL ESTATE, LLC, a
Wisconsin limited liability company, sole
Member of Stone Ridge of Lake Geneva, LLC

By: FAIRWYN INVESTMENT COMPANY, LLC,
An Illinois limited liability company, as Majority in
Interest Member of Fairwyn Real Estate, LLC

_____
Charles W. Pollard III, Chairman of
Fairwyn Investment Company, LLC

January 1, 2020 Wage Scale (2.5% COLA Scale Adjustment)(Rev.11.2019)

Title	Grade	Min Salary	Mid Salary	Max Salary	Min/Hr	Mid/Hr	Max/Hr	**Max/Hr w/ 9 Certs**
Director of Utilities	18	73,970.66	85,066.26	96,161.86	35.5628	40.8972	46.2317	No Increase In Rate
Wastewater Superintendent	15	62,107.20	71,423.27	80,739.35	29.8592	34.3381	38.8170	No Increase In Rate
Water Superintendent	15	62,107.20	71,423.27	80,739.35	29.8592	34.3381	38.8170	No Increase In Rate
Office Manager	11	49,194.72	56,573.92	63,953.13	23.6513	27.1990	30.7467	No Increase In Rate
Asst. WW Superintendent	11	49,194.72	56,573.92	63,953.13	23.6513	27.1990	30.7467	31.9498
Lead Wastewater Operator	11	49,194.72	56,573.93	63,953.13	23.6513	27.1990	30.7467	31.9498
Water Meter Foreman	10	46,410.11	53,371.63	60,333.14	22.3126	25.6594	29.0063	30.2687
Assistant Office Manager/Bookke	9	43,783.12	50,350.59	56,918.06	21.0496	24.2070	27.3645	No Increase In Rate
Operator II	9	43,783.12	50,350.59	56,918.06	21.0496	24.2070	27.3645	28.6827
Operator I	8	41,304.83	47,500.56	53,696.28	19.8581	22.8368	25.8155	27.1865
Utility Billing Clerk	6	36,761.15	42,275.33	47,789.50	17.6736	20.3247	22.9757	No Increase In Rate
Seasonal Utility Staff (New)	1				13.2068	15.1878	17.1688	No Increase In Rate

Changes Reflect 2.5% Increase to All Grade Ranges

*Certification Max Pay Rates Not Increased Due To Revision in February

*Certification Pay incorporated with Operator's wage

*Cert Pay: 25¢ / subclass

*Total of 9 subclasses

A1 - Suspended Growth
B - Solids Separation
C - Biological Solids H&R
L - Lab
N - Total Nitrogen
SS - Collection System
G - Groundwater
D - Distribution
I - Iron Removal

*Priority on attaining Dept. subclasses

#12

Lake Geneva Utility Commission
Water Utility

		ACTUAL 12/31/2017	ACTUAL 12/31/2018	*Budget Thru 12/31/2019*	Actual Thru 9/30/2019	Estimated YE 2019	Proposed 2020
REVENUES							
62-00-00-41900	INTEREST EARNED	3,637	5,547	*2,500*	8,466	12,300	14,200
62-00-00-41910	LGIP IMPACT FEES INTEREST	1,042	5,336	*3,000*	7,564	9,450	12,000
62-00-00-46000	UNMETERED SALES-HYDRANTS	0	0	*0*	0	0	0
62-00-00-46010	UNMETERED SALES-RESIDENTIAL	0	0	*0*	0	0	0
62-00-00-46020	UNMETERED SALES-COMMERCIAL	6,287	6,102	*5,500*	3,552	3,950	5,500
62-00-00-46030	UNMETERED SALES-INDUSTRIAL	0	0	*0*	0	0	0
62-00-00-46040	UNMETERED SALES TO PUBLIC AUTH	432	0	*0*	0	0	0
62-00-00-46100	METERED SALES TO SERV CUSTOMRS	0	0	*0*	0	0	0
62-00-00-46110	METERED SALES-RESIDENTIAL	619,230	615,820	*637,000*	481,843	634,500	652,500
62-00-00-46111	METERED SALES RESIDENTIAL SUB	75,373	73,153	*76,000*	58,584	69,600	73,200
62-00-00-46112	METERED SALES-RES MULTI	124,081	121,127	*122,000*	95,115	125,000	128,500
62-00-00-46120	METERED SALES COMM CITY	265,845	272,239	*268,000*	211,086	271,000	279,000
62-00-00-46121	METERED SALES COMMERCIAL SUB	153,532	153,652	*156,000*	99,214	124,700	149,500
62-00-00-46130	METERED SALES INDUSTRIAL	30,179	31,157	*30,500*	26,328	33,600	34,100
62-00-00-46140	METERED SALES TO PUBLIC AUTH	92,380	83,109	*82,000*	78,975	104,000	88,500
62-00-00-46200	PRIVATE FIRE PROTECTION	59,591	62,076	*62,400*	49,237	62,220	64,100
62-00-00-46210	PRIVATE FIRE PROTECTION SUB	3,744	3,744	*3,745*	2,808	3,900	4,300
62-00-00-46300	PUBLIC FIRE PROTECTION	234,645	237,668	*248,263*	186,613	246,000	256,300
62-00-00-46400	OTHER SALES PUBLIC AUTHORITY	185	0	*0*	72	125	0
62-00-00-46500	OTHER WATER SALES	0	11	*0*	0	0	0
62-00-00-46600	SALES FOR RESALE	0	0	*0*	0	0	0
62-00-00-46700	INTERDEPARTMENTAL SALES	0	0	*0*	0	0	0
62-00-00-47000	FORFEITED DISCOUNTS	4,398	3,922	*3,600*	2,749	4,400	4,000
62-00-00-47100	MISCELLANEOUS SERVICE REV	0	254	*0*	0	0	0
62-00-00-47110	CASH SHORT & OVER	66	0	*0*	4	5	0
62-00-00-47200	RENTS FROM WATER PROPERTY	0	0	*0*	0	0	0
62-00-00-47210	POLICE DEPT POLE BLDG RENT	0	0	*0*	0	0	0
62-00-00-47220	VERIZON LEASE	23,970	25,168	*26,427*	26,745	26,745	27,748
62-00-00-47221	GENEVA ON LINE RENT	19,691	20,676	*22,514*	16,974	22,632	23,640
62-00-00-47222	T-MOBILE LEASE	37,288	38,780	*40,331*	40,855	40,855	41,944
62-00-00-47225	AT & T LEASE	51,884	54,478	*57,202*	57,697	57,697	60,062
62-00-00-47230	SPRINT RENT	44,007	46,207	*48,517*	48,517	48,517	50,943
62-00-00-47235	US CELLULAR LEASE	29,375	21,076	*22,499*	22,204	22,204	23,399
62-00-00-47240	GATEWAY LEASE	2,500	7,500	*5,000*	5,000	5,000	5,000
62-00-00-47300	INTERDEPARTMENTAL RENTS	0	0	*0*	0	0	0
62-00-00-47400	OTHER WATER REVENUE	41,767	37,854	*25,000*	22,079	29,000	25,000
62-00-00-49000	APPL. PRIOR YR APPROPRIATIONS	0	0	*0*	0	0	435,000
62-00-00-99000	CAP CNTRITNS-CITY DONATIONS	0	0	*0*	0	0	0
62-00-00-99005	CAP CONTRIBUTIONS-IMPACT FEES	139,932	174,350	*84,250*	112,554	129,454	126,750
62-00-00-99010	CAP CNTRBTNS-CUSTOMER	11,269	21,564	*0*	0	0	375,000
	TOTAL REVENUE	***2,076,328***	***2,122,570***	***2,032,248***	**1,664,838**	**2,023,502**	**2,960,186**

#13

Lake Geneva Utility Commission
Water Utility

		ACTUAL 12/31/2017	ACTUAL 12/31/2018	*Budget Thru 12/31/2019*	Actual Thru 9/30/2019	Estimated YE 2019	Proposed 2020
EXPENSES							
SOURCE OF SUPPLY - OPERATION							
62-00-00-60000	SUPERVISION & ENGINEERING	4,568	8,008	*6,500*	3,649	5,975	6,800
62-00-00-60100	LABOR & EXPENSES	18,058	12,950	*15,000*	8,949	14,525	14,750
62-00-00-60200	CHEMICALS	0	6,017	*2,500*	4,434	5,300	5,600
62-00-00-60300	MISC EXPENSES & UTILITY	42,228	34,124	*40,000*	27,141	35,900	40,000
	TOTAL SOURCE OF SUPPLY - OPERATION	***64,853***	***61,100***	***64,000***	***44,173***	***61,700***	**67,150**
SOURCE OF SUPPLY - MAINTENANCE							
62-00-00-61000	SUPERVISION & ENGINEERING	1,221	3,673	*3,400*	1,854	2,410	4,200
62-00-00-61100	STRUCTURE & IMPRVMT	0	5	*500*	906	1,055	500
62-00-00-61400	WELLS MAINTENANCE	10,098	124,696	*85,000*	9,781	67,300	10,000
62-00-00-61600	MAINS & VALVES-TO RESVR	0	0	*0*	2,015	5,725	2,500
	TOTAL SOURCE OF SUPPLY - MAINTENANCE	***11,320***	***128,374***	***88,900***	***14,555***	***76,490***	**17,200**
PUMPING EXPENSE - OPERATION							
62-00-00-62000	SUPERVISION & ENGINEERING	8,279	6,002	*7,800*	3,347	4,400	7,800
62-00-00-62100	FUEL PURCHASES (BIG BERTHA)	0	0	*0*	0	0	0
62-00-00-62300	PUMPING POWER PURCHASED	74,852	65,363	*65,000*	44,547	60,300	65,000
62-00-00-62400	PUMPING LABOR & EXPENSE	1,807	2,243	*2,400*	1,690	2,200	2,400
62-00-00-62600	MISCELLANEOUS EXPENSE	1,167	1,284	*250*	66	1,275	1,550
	TOTAL PUMPING EXPENSE - OPERATION	***86,104***	***74,893***	***75,450***	***49,651***	***68,175***	**76,750**
PUMPING EXPENSE - MAINTENANCE							
62-00-00-63000	SUPERVISION & ENGINEERING	4,948	864	*3,500*	1,791	2,400	2,800
62-00-00-63100	MAINTENANCE OF STRUCTURES	7,816	2,018	*2,200*	22	1,500	2,200
62-00-00-63300	MAINT PUMPING EQUIP	28,277	14,361	*17,500*	3,760	4,700	25,000
	TOTAL PUMPING EXPENSE - MAINTENANCE	***41,042***	***17,244***	***23,200***	***5,573***	***8,600***	**30,000**
WATER TREATMENT - OPERATION							
62-00-00-64000	SUPERVISION & ENGENEERING	13,576	25,367	*18,750*	20,779	26,700	23,600
62-00-00-64100	CHEMICALS	38,795	33,591	*38,000*	27,329	35,800	38,000
62-00-00-64200	LABOR & EXPENSES (LAB)	29,103	29,049	*29,500*	23,278	29,550	30,000
62-00-00-64300	MISC EXPENSE	6,237	5,830	*1,500*	244	6,100	6,750
	TOTAL WATER TREATMENT - OPERATION	***87,710***	***93,836***	***87,750***	***71,630***	***98,150***	**98,350**

Lake Geneva Utility Commission
Water Utility

		ACTUAL 12/31/2017	ACTUAL 12/31/2018	*Budget Thru 12/31/2019*	Actual Thru 9/30/2019	Estimated YE 2019	Proposed 2020
WATER TREATMENT - MAINTENANCE							
62-00-00-65000	SUPERVISION & ENGINEERING	8,564	8,443	*7,750*	7,277	9,500	10,800
62-00-00-65100	PLANT MAINTENANCE	4,728	2,876	*3,000*	3,107	3,700	4,000
62-00-00-65200	MAINT WATER TREATMENT EQUIP	251,323	56,112	*60,000*	44,724	57,500	50,000
	TOTAL WATER TREATMENT - MAINTENANCE	***264,616***	***67,431***	***70,750***	***55,109***	***70,700***	**64,800**
TRANSMISSION & DISTRIBUTION - OPERATION							
62-00-00-66000	OPERATIONS SUPERVISION	7,882	10,520	*9,000*	3,896	9,400	9,900
62-00-00-66100	MAINT OPS-STANDPIPES	9,039	14,327	*9,800*	7,734	10,880	10,000
62-00-00-66200	TRANS & DISTRIBUTION-FLUSHING	7,140	5,732	*7,500*	2,135	4,600	5,300
62-00-00-66300	METER EXPENSE	7,770	4,518	*9,000*	13,259	17,800	13,000
62-00-00-66400	CUSTOMER INSTALLATIONS EXP	0	0	*0*	0	0	0
62-00-00-66500	MISC EXPENSE LICENSE & TOOLS	2,787	1,829	*4,000*	1,291	2,100	3,000
	TOTAL TRANS. & DISTRIBUTION - OPERATION	***34,618***	***36,925***	***39,300***	***28,315***	***44,780***	**41,200**
TRANSMISSION & DISTRIBUTION - MAINTENANCE							
62-00-00-67000	MAINTENANCE SUPERVISION	3,457	3,947	*4,400*	3,887	5,100	4,900
62-00-00-67100	STRUCTURE & IMPROVEMENTS	314	35	*400*	18	50	250
62-00-00-67200	RESERVOIR & STANDPIPES	446,243	13,947	*185,000*	1,707	11,000	511,100
62-00-00-67300	MAINT OF MAINS & VALVES	79,182	77,094	*70,000*	57,449	79,900	80,000
62-00-00-67500	MAINT SERVICES & CURB BOX	43,901	55,085	*70,000*	82,151	106,800	75,000
62-00-00-67600	MAINT OF METERS	160	1,305	*7,500*	387	4,900	6,500
62-00-00-67700	MAINT OF HYDRANTS	2,655	2,197	*12,750*	889	900	2,750
62-00-00-67800	MAINT FOUNTAINS & MISC PLANT	1,420	1,139	*2,500*	517	750	1,500
	TOTAL TRANS. & DISTRIBUTION - MAINTENANCE	***577,333***	***154,750***	***352,550***	***147,005***	***209,400***	**682,000**
CUSTOMER ACCOUNTS							
62-00-00-90100	SUPERVISION	13,208	13,240	*12,000*	10,723	13,046	14,700
62-00-00-90200	METER READING EXPENSE	4,843	3,277	*3,250*	3,606	4,750	5,300
62-00-00-90300	RECORDS & COLLECTION EXPENSE	21,702	14,836	*16,000*	12,998	15,100	16,000
62-00-00-90400	UNCOLLECTABLE ACCOUNTS	1,415	85	*100*	27	125	125
62-00-00-90500	MISC CUSTOMER A/CS EXP	4,970	2,382	*3,000*	0	0	0
62-00-00-90600	CUSTOMER SERVICE & INFORMATION	26,555	26,113	*27,500*	19,228	25,200	27,700
	TOTAL CUSTOMER ACCOUNTS	***72,694***	***59,933***	***61,850***	***46,582***	***58,221***	**63,825**

Lake Geneva Utility Commission
Water Utility

		ACTUAL 12/31/2017	ACTUAL 12/31/2018	*Budget Thru 12/31/2019*	Actual Thru 9/30/2019	Estimated YE 2019	Proposed 2020
ADMIN & GENERAL OPERATIONS							
62-00-00-92000	ADMIN & GENERAL SALARIES	31,008	21,950	*98,280*	18,207	23,800	25,500
62-00-00-92001	DIRECTOR'S SALARY EXPENSE	35,812	40,290	*42,047*	33,950	44,231	45,151
62-00-00-92100	OFFICE SUPPLIES & EXPENSE	13,735	18,178	*17,000*	11,478	15,900	17,000
62-00-00-92300	OUTSIDE SERVICES EMPLOYED	28,918	16,605	*65,800*	54,512	107,550	65,000
62-00-00-92400	PROPERTY/LIAB/WC INSURANCE	29,900	27,759	*33,500*	23,623	31,500	32,500
62-00-00-92500	INJURIES & DAMAGE	0	0	*0*	0	0	0
62-00-00-92600	EMPLOYEE PENSIONS & BENEFITS	1,896	2,786	*935*	977	1,025	1,100
62-00-00-92601	COMP TIME WATER	0	-80	*0*	1,678	0	0
62-00-00-92605	PAID TIME OFF	30,422	26,123	*36,660*	18,246	25,200	26,400
62-00-00-40800	SS TAX EXPENSE	29,400	30,889	*32,385*	22,119	29,700	32,400
62-00-00-92610	HEALTH INSURANCE EXPENSE	150,571	140,049	*110,489*	64,360	89,825	97,000
62-00-00-92620	DENTAL INSURANCE EXPENSE	7,931	7,440	*7,704*	4,700	7,000	7,200
62-00-00-92625	LONG TERM DISABILITY	1,397	1,378	*1,525*	885	1,330	1,400
62-00-00-92630	LIFE INSURANCE EXPENSE	1,253	1,132	*1,525*	928	1,335	1,360
62-00-00-92640	PENSION EXPENSE	26,963	40,867	*27,105*	19,002	25,500	27,900
62-00-00-92645	PENSION EXPENSE-GASB 68 ADJ	44,155	0	*0*	0	0	0
62-00-00-92660	BEREAVEMENT EXPENSE	865	0	*0*	0	0	0
62-00-00-92670	FAMILY MEDICAL LEAVE	4,737	431	*0*	0	7,837	0
62-00-00-92680	ON CALL EXPENSE	2,650	2,650	*2,650*	1,950	2,650	2,650
62-00-00-92700	VACATION PAY	0	0	*0*	0	0	0
62-00-00-92701	HOLIDAY PAY	12,520	9,724	*13,088*	5,424	9,400	11,050
62-00-00-92702	PERSONAL DAY P/R EXPENSE	-1,936	0	*0*	0	0	0
62-00-00-92703	OPEB-ANNUAL CONTRIB	-5,801	0	*0*	0	0	0
62-00-00-92800	REGULATORY COMMISSION EXPENSE	0	242	*250*	0	250	250
62-00-00-92900	DUPLICATE CHARGES-CREDIT	0	0	*0*	0	0	0
62-00-00-93000	MISCELLANEOUS GENERAL EXP	5,323	3,083	*4,000*	1,931	2,250	4,000
62-00-00-93001	PRIOR PERIOD ADJUSTMENT	0	0	*0*	0	0	0
62-00-00-93100	ADMIN & GENERAL RENTS	0	0	*0*	0	0	0
62-00-00-93200	MAINTENANCE OF GENERAL PLANT	11,225	6,523	*12,000*	4,692	6,700	8,500
62-00-00-93300	TRANSPORTATION EXPENSE	8,412	6,092	*9,000*	4,352	5,500	7,000
	TOTAL ADMIN & GENERAL OPERATIONS	***471,358***	***404,112***	***515,943***	***293,014***	***438,483***	**413,361**
OTHER EXPENSES							
62-00-00-42710	INTEREST EXPENSE-OTHER	0	0	*0*	0	0	0
62-00-00-40801	PROPERTY TAX EQUIVALENT	-10,854	310,011	*330,000*	234,000	312,000	325,000
62-00-00-40802	RECORD TAX EQUIVELANT	322,167	-10,681	*0*	0	0	0
	TOTAL OTHER EXPENSES	***311,313***	***299,330***	***330,000***	***234,000***	***312,000***	**325,000**
	TOTAL OPERATION & MAINTENANCE EXPENSES	***2,022,961***	***1,397,926***	***1,709,693***	***989,607***	***1,446,699***	**1,879,636**
	REVENUES OVER O&M EXPENSES	***53,368***	***724,644***	***322,555***	***675,230***	***576,803***	**1,080,550**

Lake Geneva Utility Commission
Water Utility

		ACTUAL 12/31/2017	ACTUAL 12/31/2018	*Budget Thru 12/31/2019*	Actual Thru 9/30/2019	Estimated YE 2019	Proposed 2020
CAPITAL OUTLAY							
62-00-00-10700	OUTLAY - EQUIPMENT	0	0	0	0	0	0
62-00-00-10700	OUTLAY - VEHICLES	0	5,393	30,000	0	28,830	0
62-00-00-10700	OUTLAY - BUILDINGS	0	6,966	0	0	0	0
62-00-00-10700	OUTLAY - PUMPING EQUIPMENT	0	5,578	16,500	79,129	86,579	0
62-00-00-10700	OUTLAY - TREATMENT EQUIPMENT	0	0	0	9,221	9,221	275,000
62-00-00-10700	OUTLAY - MAINS	31,888	365,039	37,050	22,404	37,404	60,000
62-00-00-15000	MATERIAL-SUPPLIES	4,905	18,355	30,000	6,224	7,500	8,500
62-00-00-10700	OUTLAY - WATER TOWERS	0	0	0	0	0	550,000
62-00-00-34600	METERS	45,337	10,184	30,000	35,564	42,664	40,000
62-00-00-10700	OUTLAY - MISCELLANEOUS	29,978	10,927	5,000	5,032	7,380	5,200
	TOTAL CAPITAL OUTLAY	***112,108***	***422,442***	***148,550***	***157,574***	***219,578***	**938,700**
	TOTAL UTILITY ANNUAL REVENUE	***2,076,328***	***2,122,570***	***2,032,248***	***1,664,838***	***2,023,502***	**2,960,186**
	TOTAL UTILITY ANNUAL EXPENSE	***2,135,069***	***1,820,368***	***1,858,243***	***1,147,181***	***1,666,277***	***2,818,336***
	ANNUAL FUND BALANCE	***-58,740***	***302,202***	***174,005***	***517,656***	***357,225***	***141,850***
CASH TRANSFERS							
	TRANS TO IMPACT FEE RESERVE FUND	0	(314,282)	*(87,250)*	(77,064)	(138,904)	(138,750)
	TRANS TO EQUIPMENT REPLACEMENT FUND	0	0	*(10,000)*	(80,000)	(80,000)	0
	TRANS TO CAPITAL PROJECT FUND	0	0	*(76,750)*	(287,750)	(552,750)	0
	TOTAL TRANSFERS	***0***	***-314,282***	***-174,000***	***-444,814***	***-771,654***	**-138,750**
	ANNUAL FUND CASH	-58,740	-12,081	5	72,842	-414,429	3,100
DEPRECIATION							
62-00-00-40300	DEPRECIATION EXPENSE	247,655	230,314	*0*	0	240,000	0
62-00-00-40301	DEPRECIATION EXP-GOLF HILLS	5,950	4,957	*0*	0	4,850	0
62-00-00-40302	DEPRECIATION EXP-CONTRIBUTED	143,978	147,586	*0*	0	152,000	0
	TOTAL DEPRECIATION	**397,583**	**382,857**	***0***	***0***	***396,850***	**0**

Lake Geneva Utility Commission
Wastewater Utility

		ACTUAL 12/31/2017	ACTUAL 12/31/2018	*Budget Ending 12/31/2019*	Actual Thru 9/30/2019	Estimated YE 2019	Proposed 2020
REVENUES							
61-00-00-41900	INTEREST EARNED	20,363	15,974	*7,500*	19,646	26,100	32,700
61-00-00-41910	LGIP IMPACT FEES INTEREST	1,164	6,067	*7,500*	9,573	11,800	14,200
61-00-00-41950	DISCOUNTS EARNED	0	0	*0*	0	0	0
61-00-00-42670	SPECIAL ASSESSMENT-SS & L	0	0	*0*	0	0	0
61-00-00-42680	SPECIAL ASSMNTS-WATER MAINS	0	0	*0*	0	0	0
61-00-00-43230	ENVIRONMNTL PROT AGENCY GRANTS	0	0	*0*	0	0	0
61-00-00-46110	METERED SALES-RESIDENTIAL	609,241	752,313	*887,630*	654,279	859,000	870,500
61-00-00-46111	METERED SALES RESIDENTIAL SUB	82,551	95,258	*120,825*	80,539	104,500	105,000
61-00-00-46112	METERED SALES-RES MULTI	134,492	172,945	*220,882*	155,417	204,000	206,400
61-00-00-46120	METERED SALES COMM CITY	293,782	392,887	*451,927*	352,658	453,000	454,400
61-00-00-46121	METERED SALES COMMERCIAL SUB	40,658	53,621	*68,203*	55,997	65,600	66,100
61-00-00-46130	METERED SALES INDUSTRIAL	31,980	44,787	*49,077*	44,125	56,500	51,700
61-00-00-46140	METERED SALES TO PUBLIC AUTH	40,871	49,883	*64,367*	43,000	57,000	66,100
61-00-00-46400	REVENUE-PUBLIC AUTHORITY	0	0	*0*	0	0	0
61-00-00-46500	REVENUE-OUTSIDE HAULERS	146,803	157,590	*140,000*	136,917	178,000	160,000
61-00-00-46600	REVENUE-GOLF HILLS	0	0	*0*	0	0	0
61-00-00-46650	REVENUE-BAYER LEASE	3,987	3,987	*3,987*	3,987	3,987	4,500
61-00-00-46651	LEASE INCOME-US CELLULAR	0	0	*0*	0	0	0
61-00-00-46660	REVENUE-HAULER PERMITS	300	0	*300*	0	300	250
61-00-00-46670	OTHER GENERAL REVENUES	50,986	1,167	*1,500*	1,132	1,400	1,500
61-00-00-47000	FORFEITED DISCOUNTS	3,337	3,898	*3,000*	3,164	4,050	3,250
61-00-00-47100	MISCELLANEOUS SERVICE REVENUE	0	0	*0*	3,817	4,767	4,500
61-00-00-47110	CASH SHORT OR OVER	0	1	*0*	2	2	0
61-00-00-47400	REVENUE-OTHER	1,383	40	*0*	0	3,500	0
61-00-00-48300	GAIN ON DISPOSAL	1,334	0	*0*	0	0	0
61-00-00-49000	PROCEEDS FOR BORROWING	0	0	*0*	0	0	0
61-00-00-49100	APPL-PRIOR YRS APPROPRIATION	0	0	*250,000*	0	0	0
61-00-00-49200	TRANSFER FROM EQ REPLACEMENT	0	0	*0*	0	0	0
61-00-00-49210	TRNSFR FROM UNDESIGNATED FUNDS	0	0	*0*	0	0	0
61-00-00-49260	TRANSFER FROM TID	0	0	*0*	0	0	0
61-00-00-99005	CAP CNTRBTNS-IMPACT FEES	161,882	189,950	*93,250*	129,058	145,843	139,875
61-00-00-99010	CAP CNTRBTNS-MUNICIPALITY	0	0	*0*	0	0	0
61-00-00-99015	CAPITAL CONTRIBS-CUST/DEVELOPE	20,732	9,507	*0*	0	0	0
61-00-00-99020	TRANSFER FROM CITY OF LK GEN	0	0	*0*	0	0	0
61-00-00-99900	TRANSFER TO CITY OF LK GENEVA	0	0	*0*	0	0	0
	TOTAL REVENUE	***1,645,848***	***1,949,815***	***2,369,948***	**1,693,311**	**2,179,349**	**2,180,975**

#14

Lake Geneva Utility Commission
Wastewater Utility

		ACTUAL 12/31/2017	ACTUAL 12/31/2018	*Budget Ending 12/31/2019*	Actual Thru 9/30/2019	Estimated YE 2019	Proposed 2020
EXPENSES							
OUTSIDE SERVICES							
61-00-00-52050	DRUG AND ALCOHOL TESTING	223	73	*250*	203	275	250
61-00-00-52100	LABORATORY SERVICES	23,459	16,878	*16,500*	11,588	15,250	16,500
61-00-00-52120	ACCTG CONSULTANT REES/AUDITING	6,500	6,600	*7,000*	5,000	7,300	7,519
61-00-00-52160	ENGINEERING EXPENSE	982	26,785	*50,000*	15,125	27,500	50,000
61-00-00-52200	METER READING EXPENSE	23,821	27,908	*55,000*	0	40,000	40,000
61-00-00-52400	REPAIRS	0	0	*0*	0	0	0
61-00-00-52500	UTILITY-GAS-PLANT	10,314	10,837	*13,000*	4,172	8,600	11,000
61-00-00-52505	UTILITY - GAS - COLLECTION SYSTEM	0	0	*1,500*	615	775	1,000
61-00-00-52510	UTILITY-WATER	43,887	42,941	*44,500*	34,311	34,311	48,400
61-00-00-52520	UTILTITY-ELECTRICITY-PLANT	157,202	171,465	*165,000*	102,790	152,800	156,500
61-00-00-52525	UTILITY - ELECTRICITY - COLLECTION SYS.	0	0	*8,500*	7,208	10,800	11,250
61-00-00-52530	UTILITY-TRASH COLLECTION	0	0	*0*	0	0	0
61-00-00-52540	UTILITY-TELEPHONE EXPENSE	0	0	*0*	0	0	0
61-00-00-52660	OUTSIDE SERVICES EMPLOYED	0	5,479	*2,500*	4,250	4,250	5,900
61-00-00-52950	BIO-MASS HAUL/REMOVE (SLUDGE)	5,119	8,269	*15,000*	0	8,000	10,000
	TOTAL OUTSIDE SERVICES	***271,506***	***317,236***	***378,750***	***185,261***	**309,861**	**358,319**
OPERATING EXPENSES							
61-00-00-53050	COMPUTER EXPENSE	643	3,180	*4,000*	931	1,250	3,000
61-00-00-53100	OFFICE SUPPLIES EXPENSE	9,637	8,214	*10,500*	6,063	5,248	6,500
61-00-00-53110	TELEPHONE EXPENSE	2,981	3,391	*3,800*	2,924	4,250	4,200
61-00-00-53120	POSTAGE	4,586	3,773	*4,250*	1,199	4,453	4,500
61-00-00-53140	OFFICIAL PUBLICATIONS & NOTICE	1,800	52	*1,800*	0	0	750
61-00-00-53200	MEMBERSHIP FEES	165	259	*500*	0	0	500
61-00-00-53210	FREIGHT EXPENSE	685	170	*450*	0	0	300
61-00-00-53300	TRAVEL & MILEAGE EXPENSE	0	0	*50*	0	0	500
61-00-00-53310	MEALS, LODGING, ETC	200	21	*250*	150	295	1,000
61-00-00-53320	CONFERENCES & SCHOOL	1,390	1,129	*1,500*	417	1,007	3,000
61-00-00-53480	BIO-MASS SPREADING FUEL	0	0	*0*	0	0	0
61-00-00-53490	EMERGENCY POWER DIESEL FUEL	0	0	*0*	0	0	0
61-00-00-53500	OPERATIONS TOOLS & EQUIP	504	297	*1,200*	1,613	1,895	1,400
61-00-00-53510	OPERATIONS-EQUIPMENT	0	0	*500*	0	0	500
61-00-00-53520	OPERATIONS-VEHICLES	0	0	*5,000*	2,713	3,600	4,500
61-00-00-53610	TRTMNT/DISP PLANT EQUIP EXP	0	0	*350*	0	0	350
61-00-00-53900	FIRST AID & SAFETY SUPPLIES	2,041	1,757	*1,300*	1,036	1,650	1,750
61-00-00-53990	MISCELLANEOUS EXPENSE	122	293	*1,500*	1,278	1,490	1,600
61-00-00-54100	LAB CERTIFICATION EXPENSE	2,595	2,978	*3,500*	2,711	3,536	3,700
	TOTAL OPERATING EXPENSES	***27,350***	***25,515***	***40,450***	***21,034***	**28,673**	**38,050**

Lake Geneva Utility Commission
Wastewater Utility

		ACTUAL 12/31/2017	ACTUAL 12/31/2018	*Budget Ending 12/31/2019*	Actual Thru 9/30/2019	Estimated YE 2019	Proposed 2020
INSURANCE							
61-00-00-55120	INSURANCE-GEN LIABILITY	1,187	11,644	*932*	11,535	15,380	15,850
61-00-00-55140	INSURANCE-VEHCILE	2,338	0	*2,458*	0	0	0
61-00-00-55160	INSURANCE-WORKMAN'S COMP	10,765	9,853	*9,823*	6,904	9,205	9,500
61-00-00-55170	INSURANCE-PROPERTY	7,852	0	*11,644*	0	0	0
61-00-00-55180	SERVICELINE BACK UP	0	0	*2,000*	0	2,000	2,000
61-00-00-55300	LAND RENTAL EXPENSE	0	0	*0*	0	0	0
61-00-00-55400	DEPRECIATION EXPENSE	0	0	*0*	0	0	0
61-00-00-55410	INTEREST EXPENSE	0	0	*0*	0	0	0
61-00-00-55480	AMORTIZATION OF LOAN DISCOUNTS	0	0	*0*	0	0	0
	TOTAL INSURANCE	***22,142***	***21,497***	***26,857***	***18,439***	**26,585**	**27,350**
WATER TREATMENT - OPERATION							
61-00-00-90200	ADMINISTRATIVE SALARY EXPENSE	84,461	74,158	*69,785*	56,663	74,300	79,300
61-00-00-92000	COMMISSIONER'S SALARY	0	0	*0*	0	0	0
61-00-00-92001	DIRECTOR'S SALARY EXPENSE	34,993	40,290	*35,740*	33,950	44,231	45,151
61-00-00-92200	UTILITY COMMISSION SERVICES	0	0	*0*	0	0	0
61-00-00-92300	OUTSIDE SERVICES EMPLOYED	8,211	1,550	*5,500*	2,338	3,120	5,500
61-00-00-92310	LAB TESTING & CERTIFICATION	0	0	*0*	0	0	0
61-00-00-92600	EMPLOYEE BENEFITS	167	936	*200*	235	285	235
61-00-00-92601	SICK PAY EXPENSE	0	0	*0*	0	0	0
61-00-00-92610	HEALTH INSURANCE EXPENSE	159,437	177,081	*163,961*	96,200	137,300	156,000
61-00-00-92620	DENTAL INSURANCE EXPENSE	6,534	7,575	*7,284*	4,950	6,555	6,700
61-00-00-92625	LONG TERM DISABILITY	1,139	1,275	*1,200*	710	990	1,150
61-00-00-92630	LIFE INSURANCE EXPENSE	1,166	1,084	*1,260*	507	695	1,300
61-00-00-92640	PENSION EXPENSE	22,241	34,335	*23,820*	15,865	21,415	24,900
61-00-00-92645	PENSION EXPENSE-GASB 68 ADJ	2,385	0	*2,500*	0	2,500	2,500
61-00-00-92650	UNIFORM/CLOTHING EXPENSE	2,264	2,362	*2,750*	1,666	2,524	3,450
61-00-00-92660	BEREAVEMENT EXPENSE	0	0	*0*	0	0	0
61-00-00-92700	VACATION PAY EXPENSE	0	0	*0*	0	0	0
61-00-00-92701	HOLIDAY PAY EXPENSE	11,479	8,972	*12,942*	4,284	6,700	7,040
61-00-00-92702	PERSONAL DAY EXPENSE	4,824	0	*0*	0	0	0
61-00-00-92703	OPEB-ANNUAL CONTRIB	-4,512	0	*0*	0	0	0
61-00-00-40800	SOCIAL SECURITY EXPENSE	24,281	28,356	*28,548*	18,285	24,600	29,200
61-00-00-60000	WAGES EXPENSE	178,095	207,800	*214,129*	130,081	182,600	220,200
61-00-00-60100	OVERTIME WAGES EXPENSE	11,577	15,108	*10,313*	9,942	13,100	11,900
61-00-00-60200	ON CALL PAY	2,625	2,600	*2,600*	1,950	2,600	2,600
61-00-00-60300	COMP TIME WAGES	0	6,019	*0*	1,880	5,100	5,500
61-00-00-60400	PAID TIME OFF	24,584	22,592	*33,569*	9,011	17,800	18,900
	TOTAL SALARY AND BENEFITS	***575,949***	***632,094***	***616,101***	***388,518***	**546,415**	**621,526**

Lake Geneva Utility Commission
Wastewater Utility

		ACTUAL 12/31/2017	ACTUAL 12/31/2018	*Budget Ending 12/31/2019*	Actual Thru 9/30/2019	Estimated YE 2019	Proposed 2020
LAB SUPPLIES							
61-00-00-63100	POLYMER	4,290	4,290	*15,000*	0	4,500	9,000
61-00-00-63200	CHLORINE EXPENSE	358	0	*0*	0	0	0
61-00-00-63300	LIME EXPENSE	0	0	*0*	0	0	0
61-00-00-63400	CHEMICAL EXPENSE	197	41	*250*	0	125	250
61-00-00-63500	WATER SOFTENER PROGRAM	0	100	*500*	0	0	1,000
61-00-00-64000	LABORATORY SUPPLIES	6,342	5,275	*5,500*	13,394	15,500	10,950
61-00-00-64100	LAB CERTIFICATION EXP	0	0	*0*	0	0	0
	TOTAL LAB SUPPLIES	***11,186***	***9,706***	***21,250***	***13,394***	**20,125**	**21,200**
MISCELLANEOUS EXPENSES							
61-00-00-65000	OTHER OPERATING SUPPLIES-KITCH	622	510	*750*	248	550	650
61-00-00-65500	MAINT OF OTHER PLANT	519	191	*1,500*	478	1,030	1,500
	TOTAL MISCELLANEOUS EXPENSES	***1,141***	***700***	***2,250***	***726***	**1,580**	**2,150**
MAINTENANCE							
61-00-00-93500	MAINT-LAB BLDG	137,506	3,281	*5,000*	0	0	3,500
61-00-00-93501	MAINT-HEADWORKS BLDG	3,687	336	*4,000*	353	750	3,000
61-00-00-93502	MAINT-DIGESTER & AER/TRANS BLD	3,229	437	*4,000*	930	1,100	2,000
61-00-00-93503	MAINT-PROCESS BLDG	1,297	786	*1,500*	0	0	3,500
61-00-00-93504	MAINT-EFFLUENT BLDG	250	15	*1,250*	5,764	5,775	3,250
61-00-00-93505	MAINT-POLE BARN BLDG	0	0	*1,500*	22	50	1,500
61-00-00-93506	MAINT-VEHICLE STORAGE BLDGS	0	0	*750*	0	0	500
61-00-00-93507	MAINT-DEWATERING-B/PRESS BLDG	1,146	0	*750*	44,891	45,500	750
61-00-00-93600	MAINT-LAB EQUIPMENT	300	67	*1,500*	68	125	1,000
61-00-00-93601	MAINT-HEADWORKS EQUIP	11,100	10,661	*7,500*	16,432	27,400	38,000
61-00-00-93602	MAINT-DIGESTERS EQUIP	1,653	827	*2,500*	2,155	2,300	23,500
61-00-00-93603	MAINT-PROCESS EQUIP	3,063	521	*3,000*	1,861	2,700	3,000
61-00-00-93604	MAINT-EFFLUENT EQUIP	717	15,753	*16,500*	126	150	16,500
61-00-00-93607	MAINT-DEWATERING-B/PRESS EQUIP	18,214	11,384	*2,500*	434	10,600	12,000
61-00-00-93700	MAINT-VEHICLES & EQUIP	4,373	11,651	*9,750*	3,101	3,500	5,000
61-00-00-93800	MAINT-LIFT STATIONS	45,574	53,318	*38,500*	19,894	32,300	35,000
61-00-00-93810	MAINT-MAINS	3,114	65,648	*45,000*	8,095	34,500	137,500
61-00-00-93820	MAINT-RECEIVING STATION	441	1,206	*4,500*	820	875	1,500
61-00-00-93830	MAINT-SEEPAGE CELLS/POND	6,547	6,842	*7,500*	5,388	7,625	8,000
61-00-00-93840	MAINT-CLARIFIER	1,641	5,327	*67,500*	522	750	66,000
61-00-00-93850	MAINT-OXIDATION DITCH	3,785	1,378	*10,000*	31	50	1,500
61-00-00-93900	MAINT-LATERALS	199	-67	*1,500*	0	0	500
61-00-00-93910	MAINTENANCE-OTHER	8,514	1,202	*1,500*	684	700	1,500
	TOTAL MAINTENANCE	***256,349***	***190,571***	***238,000***	***111,571***	**176,750**	**368,500**
	TOTAL OPERATION & MAINTENANCE EXPENSES	***1,165,622***	***1,197,320***	***1,323,658***	***738,942***	**1,109,989**	**1,437,095**
	REVENUES OVER O&M EXPENSES	***480,225***	***752,495***	***1,046,290***	***954,369***	**1,069,360**	**743,880**

Lake Geneva Utility Commission
Wastewater Utility

		ACTUAL 12/31/2017	ACTUAL 12/31/2018	*Budget Ending 12/31/2019*	Actual Thru 9/30/2019	Estimated YE 2019	Proposed 2020
CAPITAL OUTLAY							
61-00-00-58000	OUTLAY-EQUIPMENT	50,421	0	*0*	705	705	178,500
61-00-00-58100	OUTLAY-VEHICLES	0	0	*30,000*	38,316	67,144	0
61-00-00-58200	OUTLAY-BUILDINGS	134,602	0	*231,000*	0	0	0
61-00-00-58300	OUTLAY-LAND & IMPROVEMENTS	0	0	*0*	83,817	159,000	0
61-00-00-58400	OUTLAY-COLLECTION SYSTEM	72,937	2,132	*75,000*	0	0	94,500
61-00-00-58900	OUTLAY-MISCELLANEOUS	9,685	10,927	*65,000*	5,122	9,900	78,400
	TOTAL CAPITAL OUTLAY	***267,645***	***13,059***	***401,000***	***127,960***	**236,749**	**351,400**
	TOTAL UTILITY ANNUAL REVENUE	***1,645,848***	***1,949,815***	***2,369,948***	***1,693,311***	**2,179,349**	**2,180,975**
	TOTAL UTILITY ANNUAL EXPENSE	***1,433,267***	***1,210,379***	***1,724,658***	***866,902***	***1,346,738***	***1,788,495***
	ANNUAL FUND BALANCE	**212,580**	**739,436**	**645,290**	**826,409**	**832,611**	**392,480**
CASH TRANSFERS							
61-00-00-13220	TRANS TO IMPACT FEE RESERVE FUND	0	(161,882)	*(100,750)*	(138,631)	(157,643)	(154,075)
61-00-00-59000	TRANS TO EQUIP. REPLACEMENT FUND	0	(307,663)	*(214,000)*	(416,500)	(416,500)	(65,000)
61-00-00-59600	TRANS TO CAPITAL PROJECT FUND	0	0	*(329,000)*	(416,750)	(727,000)	(170,000)
	TOTAL TRANSFERS	***0***	***-469,545***	***-643,750***	***-971,881***	***-1,301,143***	***-389,075***
	ANNUAL FUND CASH	***212,580***	***269,891***	***1,540***	***-145,473***	***-468,532***	***3,405***
DEPRECIATION							
61-00-00-40300	DEPRECIATION EXPENSE	567,019	630,188	*0*	0	660,000	0
61-00-00-40302	DEPRECIATION EXPENSE-GHSD	8,075	11,072	*0*	0	14,500	0
	TOTAL DEPRECIATION	***575,094***	***641,259***	***0***	***0***	**674,500**	**0**

City of Lake Geneva
Utility Commission
Expense Request Summary
2020 Budget Year

Requested Project	Project #	Location	Project Type		Estimated Cost
Clarifier Dome Painting	WW18-01	WWTP	Maintenance	$	66,000
Headworks & Digester L.L. Paint	WW18-04	WWTP	Maintenance	$	42,500
Exterior Painting - Var. Serv. Bldgs.	WW18-07	WWTP	Maintenance	$	6,500
*Cemetery Rd. Extension	WW18-15	Collection Sys.	New	$	390,000
WWTP SCADA System Upgrade	WW19-03	WWTP	Upgrade	$	175,000
Operations Needs Report	WW19-05	WWTP	Study	$	25,000
Public Facilities Needs Assessment	WW19-06	System Wide	Study	$	25,000
Collection System Televising	WW20-01	Collection Sys.	Maintenance	$	30,000
Collection System Smoke Testing	WW20-02	Collection Sys.	Maintenance	$	50,000
Manhole Rehabilitation	WW20-03	Collection Sys.	Maintenance	$	48,750
Sewer Main Root Control	WW20-04	Collection Sys.	Maintenance	$	8,750
Bar Screen Rehabilitation	WW20-05	WWTP	Maintenance	$	12,500
Lift Station Control Panel - LG & CC	WW20-06	Collection Sys.	Upgrade	$	19,500
Sewer Main Lining	WW20-07	Collection Sys.	Rehabilitation	$	75,000
West Clarifier Rehabilitation	WW20-08	WWTP	Rehabilitation	$	75,000
Caselle Work Order Module	WW20-09	Office	New	$	3,400
			Wastewater Subtotal	**$**	**1,052,900**
Water Meter Replacement	DW18-05	Distribution	Replacement	$	40,000
Leak Survey	DW18-09	Distribution	Maintenance	$	20,000
*Cemetery Rd. Extension	DW18-10	Distribution	New	$	165,000
Boost Pump A2 Pull and Inspect	DW19-02	Treatment	Maintenance	$	17,500
Dodge Tower Raising & Painting	DW19-05	Distribution	Upgrade & Maintenance	$	1,050,000
Public Facilities Needs Assessment	DW19-07	System Wide	Study	$	25,000
Boost Pump B3 Pull and Inspect	DW20-01	Treatment	Maintenance	$	17,500
Filter Plant B Rehabilitation	DW20-02	Treatment	Rehabilitation	$	275,000
Caselle Work Order Module	DW20-03	Office	New	$	3,400
Warren St. Main	DW20-04	Distribution	New	$	60,000
			Water Subtotal	**$**	**1,673,400**

#15

DIXON

ENGINEERING & INSPECTION SERVICES FOR THE COATING INDUSTRY

4811 S. 76th Street
Suite 109
Greenfield, WI 53220
Telephone: (414) 529-1859
Fax: (414) 282-7830

November 4, 2019 (revised)

RE: Lake Geneva Utility Commission
AT&T (WI2673)
Host Tank
Drawing Review #1

Mr. Josh Gajewski
Utility Director
Lake Geneva Utility Commission
361 Main Street
Lake Geneva, WI 53147

Dear Mr. Gajewski:

Dixon Engineering, Inc. (DIXON) did not perform an initial site inspection for the AT&T antenna upgrade on the Host water tank located in Lake Geneva, Wisconsin. The last inspection on this tank for AT&T was April 10, 2018. Photos from that inspection and other recent site visits were referenced for this review.

DIXON has reviewed the submitted AT&T design drawings, mount assessment, and structural assessment.

- The design drawings for the project were completed by Ramaker & Associates and they are last dated October 14, 2019.
- The mount assessment was completed by Ramaker & Associates and it is dated September 20, 2019.
- The structural assessment was completed by Ramaker & Associates and it is dated September 20, 2019.

From the review of the design drawings, review of the mount assessment, and review of the structural assessment; DIXON has compiled the following list of comments, questions, recommended changes, and improvements for the proposed work to be completed on the tank.

A. The mount assessment been reviewed and found to be in order. Add a reference to this document (including the date on the document) in the design drawings. This reference can be incorporated into the two notes in the upper left hand corner of Detail 2 on Sheet A3.

B. The structural analysis been reviewed and found to be in order. Add a reference to this document (including the date on the document) in the design drawings. This reference can be incorporated into the two notes in the upper left hand corner of Detail 2 on Sheet A3.

C. The following is a summary of the project (on the tank):

- Remove six Commscope antennas.
- Remove nine RRUs.
- Remove six TMAs.
- Install six new Commscope (NNH4-D65B-R6H4) antennas.
- Install nine new RRUs
    - i. Three Ericsson RRUS-4449.
    - ii. Three Ericsson RRUS-4426
    - iii. Three Ericsson RRUS-4478 B14.
- Add one new Fiber Trunk Cable (smaller cable).

D. Add a note that the new Fiber Trunk Cable needs to be properly attached onto existing routing components used by AT&T or properly stacked onto existing AT&T cables in the dry interior and on the roof.

   - Also add a note that says this new Fiber Trunk Cable cannot be attached to or behind the ladder in the access tube.

E. A note needs to be added about restoring the site to pre-project conditions at the end of the project.

F. Any new angle adapters or pipe clamps that might be added need to be attached with rubber strips to prevent metal on metal contact. This requirement needs to be added to the design drawings.

G. Paint repairs could be required on the exterior and in the dry interior for this project. Add the following "General Paint Notes" to the design drawings.

Surface Preparation (Exterior & Dry Interior):

- Abrasive blast clean all new steel components to an SSPC-SP6 "Commercial Blast Cleaning" condition prior to application of primer coat.
- After welding or cutting, clean all damaged surfaces in accordance with SSPC-SP3 "Power Tool Cleaning" condition prior to application of prime coat.

Coating (Exterior):

- The exterior paint repair system will be one prime coat of Tnemec Series 66, one intermediate coat of Tnemec Series 1074, and one topcoat of Tnemec Series 1074UV. Paint the exterior to match the existing topcoat color.
- The three-coat system will be applied at 3.0 - 4.0 mils per coat, to a thickness of 9.0 - 12.0 mils.

Coating (Dry Interior):

- The dry interior paint repair system will be three coats of Tnemec Series 66. Paint the dry interior to match the existing topcoat color.
- The three-coat system will be applied at 3.0 - 4.0 mils per coat, to a thickness of 9.0 - 12.0 mils.

Notes:

- Follow all paint manufacturers' recommendations when using their products.

The design drawings with revisions need to be resubmitted to DIXON for further review prior to construction. An itemized list of responses to each of the lettered items in this review is required or else DIXON will not start the second drawing review. It is too difficult in most occasions to verify everything was addressed without responses to follow.

After final approval of the design drawings, DIXON has to schedule and lead a preconstruction meeting at the site prior to the start of any work on the project. During the installation portion of the project, DIXON has two installation inspections contracted to be completed for this project.

If you have any questions, you can call me at 920-470-0957.

FOR DIXON ENGINEERING, INC.,

Joseph T. Hoban, P.E.
Vice President

c: Jeff Ecklund, Lake Geneva Utility Commission
Chris Kreiner, DIXON
Kayla Mulcahy, DIXON

SITE PHOTO

PROJECT : LTE 6C/5G NR UPGRADE/ SBWE RRH SWAP
SITE # : WI2673
FA # : 10080263
PTN # : 3352A0Q2LH / 3352A0Q0GJ / 3352A0Q154
PACE # : MRCHI045079/ MRCHI045088/ MRCHI045070
JURISDICTION : LAKE GENEVA

SITE NAME : AWE - LAKE GENEVA WATER TOWER
ADDRESS : 1005 HOST DR. (AKA 1003 HOST DR.)
LAKE GENEVA, WI 53147

AT&T MOBILITY

811 Know what's below. Call before you dig.
TO OBTAIN LOCATION OF PARTICIPANTS UNDERGROUND FACILITIES BEFORE YOU DIG IN WISCONSIN, CALL LOCAL STATE ONE CALL
TOLL FREE: 1-800-242-8511 OR www.diggershotline.com
WISCONSIN STATUTE REQUIRES MIN OF 2 WORKING DAYS NOTICE BEFORE YOU EXCAVATE

PROJECT INFORMATION

SITE NAME:	AWE – LAKE GENEVA WATER TOWER
COUNTY:	WALWORTH COUNTY
ADDRESS:	1005 HOST DR. (AKA 1003 HOST DR.) LAKE GENEVA, WI 53147
JURISDICTION:	LAKE GENEVA
SITE NUMBER:	WI2673
FA NUMBER:	10080263
PTN:	3352A0Q2LH / 3352A0Q0GJ / 3352A0Q154
PACE:	MRCHI045079/ MRCHI045088/ MRCHI045070
USID:	38662
LATITUDE:	42° 34' 45.2" N (42.57921°)
LONGITUDE:	88° 25' 01.9" W (–88.41720°)
TOWER OWNER:	LAKE GENEVA UTILITY COMMISSION 361 W. MAIN STREET LAKE GENEVA, WI 53147
GROUND OWNER:	LAKE GENEVA UTILITY COMMISSION 361 W. MAIN STREET LAKE GENEVA, WI 53147
LANDLORD CONTACT:	JOSH GAJEWSKI – UTILITY DIRECTOR PHONE: (262) 248–2311 EXT 6115
APPLICANT:	AT&T WIRELESS 930 NATIONAL PARKWAY SCHAUMBURG, IL 60173
AT&T PROJECT MANAGER:	PETER MCENERY PHONE: (952)–258–9629 EMAIL: PM753T@ATT.COM
AT&T CONSTRUCTION MANAGER:	TOM THEODORE EMAIL: TT698N@ATT.COM

PROJECT CONSULTANTS

PROJECT MANAGEMENT:	SAC WIRELESS CONTACT: MILLIE PARKARA EMAIL: MILLIE.PARKARA@SACW.COM
SITE ACQUISITION:	SAC WIRELESS CONTACT: SARA SCHROEDER EMAIL: SARA.SCHROEDER@SACW.COM
ARCHITECT:	RAMAKER & ASSOCIATES 855 COMMUNITY DRIVE SAUK CITY, WISCONSIN 53583 CONTACT: JOSH OPSETH PHONE: (608) 643–4100 EMAIL: JOPSETH@RAMAKER.COM
CONSTRUCTION	SAC WIRELESS CONTACT: LUIS GONZALEZ EMAIL: LUIS.GONZALEZ@SACW.COM

SCOPE OF WORK

THIS IS NOT AN ALL INCLUSIVE LIST. CONTRACTOR SHALL UTILIZE SPECIFIED EQUIPMENT PART OR ENGINEER APPROVED EQUIVALENT. CONTRACTOR SHALL VERIFY ALL NEEDED EQUIPMENT TO PROVIDE A FUNCTIONAL SITE.
THE PROJECT GENERALLY CONSISTS OF THE FOLLOWING: DECOMM UMTS 1900 & RE–CONNECT UMTS 850 RF JUMPERS TO P3. REMOVE (6) GSM TMA'S. REPLACE EXIST P4 ANTENNA W/ (3) NNH4–65B–R6H4 (12 PORT). ADD (3) RRUS4478 B14 RADIOS W/2ND FIBER IN P4. ADD (1) 12 PAIR FIBER TRUNK TO EXISTING FC12. REPLACE EXIST P2 ANTENNA W/ (3) NNH4–65B–R6H4 (12 PORT). REMOVE (3) EXISTING LTE 700 RRUS11 FROM P2 AND (3) EXISTING LTE 850 RRUS12 FROM P3. ADD (3) RRUS4449 IN P2. REPLACE (3) EXISITING LTE AWS RRUS11+A2 W/ (3) RRUS4426 B66 RADIOS WITH IN P2.
GROUND SCOPE: ADD (1) 6630, IDLE CABLE, SFPS, GPS SPLITTER, (1) OUTDOOR DC12 RAYCAP, REMOVE EXIST GEN1 DC12 RAYCAP FROM PP CABINET AND RE–PLUMB ASSOCIATED DC TRUNKS TO PROPOSED DC12. SWAP PP W/ EMERSON 512 W/ (10) RECTIFIERS, NO CONVERTERS, AND RE–USE (5) 155FT MARATHON BATTERY STRINGS (20 BATTERIES). UPGRADE V1 PURCELL TO V2 USING PURCELL UPGRADE KIT.

VICINITY MAP

LOCAL MAP

DRIVING DIRECTIONS

DIRECTIONS FROM: MITCHELL INTERNATIONAL AIRPORT,

DEPART TOWARD WI–119 W / AIRPORT SPUR (0.1 MI). KEEP STRAIGHT ONTO WI–119 W / AIRPORT SPUR (1.6 MI). TAKE RAMP RIGHT TOWARD MADISON (2.1 MI). KEEP STRAIGHT ONTO I–41 N / I–894 W / I–43 S (4.6 MI). ROAD NAME CHANGES TO I–43 S / I–894 W (344 FT). KEEP LEFT ONTO I–43 S (33.6 MI). AT EXIT 27A, TAKE RAMP RIGHT FOR US–12 EAST TOWARD LAKE GENEVA (8.5 MI). AT EXIT 330A, TAKE RAMP RIGHT FOR CR–H SOUTH / WI–120 SOUTH / WI–50 WEST TOWARD LAKE GENEVA (0.3 MI). TURN RIGHT ONTO WI–50 W / WI–120 S / CR–H S (0.2 MI). TURN LEFT ONTO WI–120 S / N EDWARDS BLVD (1.2 MI). TURN RIGHT ONTO N BLOOMFIELD RD (0.4 MI). TURN RIGHT ONTO S WELLS ST / WELLS ST (0.4 MI). TURN RIGHT ONTO HOST DR, SITE WILL BE LEFT (0.3 MI).

DRAWING INDEX

T1	TITLE SHEET
SP1	NOTES & SPECIFICATIONS
A0	OVERALL SITE PLAN
A1	COMPOUND PLAN
A2	EQUIPMENT PLAN
A3	TOWER ELEVATION
A4	ANTENNA PLAN
A5	CABLE NOTES & COLOR CODING
A6	ANTENNA, RRUSS AND MOUNTING DETAILS
A7	ANTENNA & CABLE CONFIGURATION
E1	UTILITY PLAN
G1	GROUNDING DETAILS

ENGINEER CERTIFICATION & SEAL:
I hereby certify that this plan, specification, or report was prepared by me or under my direct supervision and that I am a duly licensed Professional Engineer under the laws of the State of Wisconsin.

WISCONSIN JOSHUA M. OPSETH 45837-6 SAUK CITY, WI PROFESSIONAL ENGINEER

Joshua M Opseth 10/14/2019
Signature: Date:

CODE COMPLIANCE

- 2015 INTERNATIONAL BUILDING CODE.
- 2017 NATIONAL ELECTRICAL CODE
- TIA/EIA–222–G

REFERENCE MATERIALS

- THESE DRAWINGS ARE BASED AT&T SCOPING DOCUMENT DATED 07/02/2019
- REVISED RFDS PENDING. CONTRACTOR TO USE LATEST VERSION WITH CD'S PER SCOPE OF WORK.

SPECIAL NOTES

- ALL WORK SHALL BE INSTALLED IN CONFORMANCE WITH CURRENT AT&T CONSTRUCTION INSTALLATION GUIDE.
- EXISTING CONDITIONS WILL BE CHANGED & VERIFIED IN FIELD. IF SIGNIFICANT DEVIATIONS OR DETERIORATION ARE ENCOUNTERED AT THE TIME OF CONSTRUCTION, A REPAIR PERMIT WILL BE OBTAINED & CONTRACTOR SHALL NOTIFY ENGINEER IMMEDIATELY.
- THESE DRAWINGS ARE FULL SIZE & SCALEABLE ON 11"X17" SHEET SIZE.
- STATEMENT THAT COMPLIANCE WITH THE ENERGY CODE IS NOT REQUIRED. –SCOPE OF WORK DOES NOT INVOLVE MODIFICATIONS TO EXTERIOR ENVELOPE OF BUILDING, HVAC SYSTEMS OR ELECTRICAL LIGHTING.

DO NOT SCALE DRAWINGS

CONTRACTOR SHALL VERIFY ALL PLANS & EXISTING DIMENSIONS & CONDITIONS ON THE JOB SITE & SHALL IMMEDIATELY NOTIFY THE ARCHITECT OR ENGINEER IN WRITING OF ANY DISCREPANCIES BEFORE PROCEEDING WITH THE WORK OR BE RESPONSIBLE FOR SAME.

AT&T 930 NATIONAL PARKWAY SCHAUMBURG, IL 60173

SAC WIRELESS 540 W. MADISON ST. 9TH FLOOR CHICAGO, IL 60661 www.sacw.com 312.895.4977

A&E RAMAKER & ASSOCIATES, INC. 855 Community Dr, Sauk City, WI 53583 608-643-4100 www.Ramaker.com Sauk City, WI · Willmar, MN Woodcliff Lake, NJ · Bayamon, PR RA#:44993

LTE 6C/5G NR UPGRADE/ SBWE RRH SWAP
10080263
AWE – LAKE GENEVA WATER TOWER
1005 HOST DR. (AKA 1003 HOST DR.)
LAKE GENEVA, WI 53147

REVISIONS

REV.	DATE	DESCRIPTION	INITIALS
0	10/14/19	FOR CONSTRUCTION	CF
A	09/18/19	ISSUED FOR REVIEW	CF

NOT FOR CONSTRUCTION UNLESS LABELED AS FOR CONSTRUCTION

ENGINEER CERTIFICATION & SEAL:
I HEREBY CERTIFY THAT THIS PLAN, SPECIFICATION, OR REPORT WAS PREPARED BY ME OR UNDER MY DIRECT SUPERVISION AND THAT I AM A DULY LICENSED PROFESSIONAL ENGINEER UNDER THE LAWS OF THE STATE OF WISCONSIN.

Joshua M Opseth 10/14/2019
Signature: Date:

SHEET TITLE
TITLE SHEET

SHEET NUMBER
T1

THE INFORMATION CONTAINED IN THIS SET OF CONSTRUCTION DOCUMENTS IS PROPRIETARY BY NATURE. ANY USE OR DISCLOSURE OTHER THAN THAT WHICH RELATES TO CARRIER SERVICES IS STRICTLY PROHIBITED.

SAC File: C:\Users\cfoley\appdata\local\temp\AcPublish_14464\44993_10080263.AE203.LTE 6C_5G.RevA_YYMMDD – Ramaker.dwg 10/14/19 16:43

GENERAL CONSTRUCTION

1. FOR THE PURPOSE OF CONSTRUCTION DRAWINGS, THE FOLLOWING DEFINITIONS SHALL APPLY:
   CONTRACTOR/CM – **SAC WIRELESS**
   SUB-CONTRACTOR – **PER TRADE**
   OWNER – **AT&T WIRELESS**

2. ALL SITE WORK SHALL BE COMPLETED AS INDICATED ON THE DRAWINGS AND AT&T PROJECT SPECIFICATIONS.

3. GENERAL CONTRACTOR SHALL VISIT THE SITE AND SHALL FAMILIARIZE HIMSELF WITH ALL CONDITIONS AFFECTING THE PROPOSED WORK AND SHALL MAKE PROVISIONS. GENERAL CONTRACTOR SHALL BE RESPONSIBLE FOR FAMILIARIZING HIMSELF WITH ALL CONTRACT DOCUMENTS, FIELD CONDITIONS, DIMENSIONS, AND CONFIRMING THAT THE WORK MAY BE ACCOMPLISHED AS SHOWN PRIOR TO PROCEEDING WITH CONSTRUCTION. ANY DISCREPANCIES SHALL BE BROUGHT TO THE ATTENTION OF THE ENGINEER PRIOR TO THE COMMENCEMENT OF WORK.

4. ALL MATERIALS FURNISHED AND INSTALLED SHALL BE IN STRICT ACCORDANCE WITH ALL APPLICABLE CODES, REGULATIONS, AND ORDINANCES. GENERAL CONTRACTOR SHALL ISSUE ALL APPROPRIATE NOTICES AND COMPLY WITH ALL LAWS, ORDINANCES, RULES, REGULATIONS, AND LAWFUL ORDERS OF ANY PUBLIC AUTHORITY REGARDING THE PERFORMANCE OF WORK.

5. ALL WORK CARRIED OUT SHALL COMPLY WITH ALL APPLICABLE MUNICIPAL AND UTILITY COMPANY SPECIFICATIONS AND LOCAL JURISDICTIONAL CODES, ORDINANCES, AND APPLICABLE REGULATIONS.

6. UNLESS NOTED OTHERWISE, THE WORK SHALL INCLUDE FURNISHING MATERIALS, EQUIPMENT, APPURTENANCES, AND LABOR NECESSARY TO COMPLETE ALL INSTALLATIONS AS INDICATED ON THE DRAWINGS.

7. PLANS ARE NOT TO BE SCALED. THESE PLANS ARE INTENDED TO BE A DIAGRAMMATIC OUTLINE ONLY UNLESS OTHERWISE NOTED. DIMENSIONS SHOWN ARE TO FINISH SURFACES UNLESS OTHERWISE NOTED. SPACING BETWEEN EQUIPMENT IS THE MINIMUM REQUIRED CLEARANCE. THEREFORE, IT IS CRITICAL TO FIELD VERIFY DIMENSIONS, SHOULD THERE BE ANY QUESTIONS REGARDING THE CONTRACT DOCUMENTS, THE CONTRACTOR SHALL BE RESPONSIBLE FOR OBTAINING A CLARIFICATION FROM THE ENGINEER PRIOR TO PROCEEDING WITH THE WORK. DETAILS ARE INTENDED TO SHOW DESIGN INTENT. MODIFICATIONS MAY BE REQUIRED TO SUIT JOB DIMENSIONS OR CONDITIONS AND SUCH MODIFICATIONS SHALL BE INCLUDED AS PART OF WORK AND PREPARED BY THE ENGINEER PRIOR TO PROCEEDING WITH WORK.

8. THE CONTRACTOR SHALL INSTALL ALL EQUIPMENT AND MATERIALS IN ACCORDANCE WITH MANUFACTURER'S RECOMMENDATIONS UNLESS SPECIFICALLY STATED OTHERWISE.

9. IF THE SPECIFIED EQUIPMENT CANNOT BE INSTALLED AS SHOWN ON THESE DRAWINGS, THE CONTRACTOR SHALL PROPOSE AN ALTERNATIVE INSTALLATION SPACE FOR APPROVAL BY THE ENGINEER PRIOR TO PROCEEDING.

10. GENERAL CONTRACTOR SHALL BE RESPONSIBLE FOR THE SAFETY OF WORK AREA, ADJACENT AREAS AND BUILDING OCCUPANTS THAT ARE LIKELY TO BE AFFECTED BY THE WORK UNDER THIS CONTRACT. WORK SHALL CONFIRM TO ALL OSHA REQUIREMENTS AND THE LOCAL JURISDICTION.

11. GENERAL CONTRACTOR SHALL COORDINATE WORK AND SCHEDULE WORK ACTIVITIES WITH OTHER DISCIPLINES.

12. ERECTION SHALL BE DONE IN A WORKMANLIKE MANNER BY COMPETENT EXPERIENCED WORKMAN IN ACCORDANCE WITH APPLICABLE CODES AND THE BEST ACCEPTED PRACTICE. ALL MEMBERS SHALL BE LAID PLUMB AND TRUE AS INDICATED ON THE DRAWINGS.

13. SEAL PENETRATIONS THROUGH FIRE RATED AREAS WITH UL LISTED MATERIALS APPROVED BY LOCAL JURISDICTION. CONTRACTOR SHALL KEEP AREA CLEAN, HAZARD FREE, AND DISPOSE OF ALL DEBRIS.

14. WORK PREVIOUSLY COMPLETED IS REPRESENTED BY LIGHT SHADED LINES AND NOTES. THE SCOPE OF WORK FOR THIS PROJECT IS REPRESENTED BY DARK SHADED LINES AND NOTES. CONTRACTOR SHALL NOTIFY THE GENERAL CONTRACTOR OF ANY EXISTING CONDITIONS THAT DEVIATE FROM THE DRAWINGS PRIOR TO BEGINNING CONSTRUCTION.

15. CONTRACTOR SHALL PROVIDE WRITTEN NOTICE TO THE CONSTRUCTION MANAGER 48 HOURS PRIOR TO COMMENCEMENT OF WORK.

16. THE CONTRACTOR SHALL PROTECT EXISTING IMPROVEMENTS, PAVEMENTS, CURBS, LANDSCAPING AND STRUCTURES. ANY DAMAGED PART SHALL BE REPAIRED AT CONTRACTOR'S EXPENSE TO THE SATISFACTION OF THE OWNER.

17. THE CONTRACTOR SHALL CONTACT UTILITY LOCATING SERVICES PRIOR TO THE START OF CONSTRUCTION.

18. GENERAL CONTRACTOR SHALL COORDINATE AND MAINTAIN ACCESS FOR ALL TRADES AND CONTRACTORS TO THE SITE AND/OR BUILDING.

19. THE GENERAL CONTRACTOR SHALL BE RESPONSIBLE FOR SECURITY OF THE SITE FOR THE DURATION OF CONSTRUCTION UNTIL JOB COMPLETION.

20. THE GENERAL CONTRACTOR SHALL MAINTAIN IN GOOD CONDITION ONE COMPLETE SET OF PLANS WITH ALL REVISIONS, ADDENDA, AND CHANGE ORDERS ON THE PREMISES AT ALL TIMES.

21. THE GENERAL CONTRACTOR SHALL PROVIDE PORTABLE FIRE EXTINGUISHERS WITH A RATING OF NOT LESS THAN 2-A OT 2-A:10-B:C AND SHALL BE WITHIN 25 FEET OF TRAVEL DISTANCE TO ALL PORTIONS OF WHERE THE WORK IS BEING COMPLETED DURING CONSTRUCTION.

22. ALL EXISTING ACTIVE SEWER, WATER, GAS, ELECTRIC, AND OTHER UTILITIES SHALL BE PROTECTED AT ALL TIMES, AND WHERE REQUIRED FOR THE PROPER EXECUTION OF THE WORK, SHALL BE RELOCATED AS DIRECTED BY THE ENGINEER. EXTREME CAUTION SHOULD BE USED BY THE CONTRACTOR WHEN EXCAVATING OR DRILLING PIERS AROUND OR NEAR UTILITIES. CONTRACTOR SHALL PROVIDE SAFETY TRAINING FOR THE WORKING CREW. THIS SHALL INCLUDE BUT NOT BE LIMITED TO A) FALL PROTECTION, B) CONFINED SPACE, C) ELECTRICAL SAFETY, AND D) TRENCHING & EXCAVATION.

23. ALL EXISTING INACTIVE SEWER, WATER, GAS, ELECTRIC, AND OTHER UTILITIES, WHICH INTERFERE WITH THE EXECUTION OF THE WORK, SHALL BE REMOVED, CAPPED, PLUGGED OR OTHERWISE DISCONNECTED AT POINTS WHICH WILL NOT INTERFERE WITH THE EXECUTION OF THE WORK, AS DIRECTED BY THE RESPONSIBLE ENGINEER, AND SUBJECT TO THE APPROVAL OF THE OWNER AND/OR LOCAL UTILITIES.

24. THE AREAS OF THE OWNER'S PROPERTY DISTURBED BY THE WORK AND NOT COVERED BY THE TOWER, EQUIPMENT OR DRIVEWAY, SHALL BE GRADED TO A UNIFORM SLOPE, AND STABILIZED TO PREVENT EROSION.

25. CONTRACTOR SHALL MINIMIZE DISTURBANCE TO THE EXISTING SITE DURING CONSTRUCTION. EROSION CONTROL MEASURES, IF REQUIRED DURING CONSTRUCTION, SHALL BE IN CONFORMANCE WITH THE FEDERAL AND LOCAL JURISDICTION FOR EROSION AND SEDIMENT CONTROL.

26. NO FILL OR EMBANKMENT MATERIAL SHALL BE PLACED ON FROZEN GROUNDING. FROZEN MATERIALS, SNOW OR ICE SHALL NOT BE PLACED IN ANY FILL OR EMBANKMENT.

27. THE SUBGRADE SHALL BE BROUGHT TO A SMOOTH UNIFORM GRADE AND COMPACTED TO 95 PERCENT STANDARD PROCTOR DENSITY UNDER PAVEMENT AND STRUCTURES AND 80 PERCENT STANDARD PROCTOR DENSITY IN OPEN SPACE. ALL TRENCHES IN PUBLIC RIGHT OF WAY SHALL BE BACKFILLED WITH FLOWABLE FILL OR OTHER MATERIAL PRE-APPROVED BY THE LOCAL JURISDICTION.

28. ALL NECESSARY RUBBISH, STUMPS, DEBRIS, STICKS, STONES, AND OTHER REFUSE SHALL BE REMOVED FROM THE SITE AND DISPOSED OF IN A LAWFUL MANNER.

29. ALL BROCHURES, OPERATING AND MAINTENANCE MANUALS, CATALOGS, SHOP DRAWINGS, AND OTHER DOCUMENTS SHALL BE TURNED OVER TO THE GENERAL CONTRACTOR AT COMPLETION OF CONSTRUCTION AND PRIOR TO PAYMENT.

30. CONTRACTOR SHALL SUBMIT A COMPLETE SET OF AS-BUILT REDLINES TO THE GENERAL CONTRACTOR UPON COMPLETION OF PROJECT AND PRIOR TO FINAL PAYMENT.

31. CONTRACTOR SHALL LEAVE PREMISES IN A CLEAN CONDITION.

32. THE PROPOSED FACILITY WILL BE UNMANNED AND DOES NOT REQUIRE POTABLE WATER OR SEWER SERVICE, AND IS NOT FOR HUMAN HABITAT (NO HANDICAP ACCESS REQUIRED).

33. OCCUPANCY IS LIMITED TO PERIODIC MAINTENANCE AND INSPECTION, APPROXIMATELY 2 TIMES PER MONTH, BY AT&T TECHNICIANS.

34. NO OUTDOOR STORAGE OR SOLID WASTE CONTAINERS ARE PROPOSED.

35. ALL MATERIAL SHALL BE FURNISHED AND WORK SHALL BE PERFORMED IN ACCORDANCE WITH THE LATEST REVISION AT&T MOBILITY GROUNDING STANDARD "TECHNICAL SPECIFICATION FOR CONSTRUCTION OF GSM/GPRS WIRELESS SITES" AND "TECHNICAL SPECIFICATION FOR FACILITY GROUNDING". IN CASE OF A CONFLICT BETWEEN THE CONSTRUCTION SPECIFICATION AND THE DRAWINGS, THE DRAWINGS SHALL GOVERN.

36. CONTRACTORS SHALL BE RESPONSIBLE FOR OBTAINING ALL PERMITS AND INSPECTIONS REQUIRED FOR CONSTRUCTION. IF CONTRACTOR CANNOT OBTAIN A PERMIT, THEY MUST NOTIFY THE GENERAL CONTRACTOR IMMEDIATELY.

37. CONTRACTOR SHALL REMOVE ALL TRASH AND DEBRIS FROM THE SITE ON A DAILY BASIS.

38. INFORMATION SHOWN ON THESE DRAWINGS WAS OBTAINED FROM SITE VISITS AND/OR DRAWINGS PROVIDED BY THE SITE OWNER. CONTRACTORS SHALL NOTIFY THE ENGINEER OF ANY DISCREPANCIES PRIOR TO ORDERING MATERIAL OR PROCEEDING WITH CONSTRUCTION.

39. NO WHITE STROBE LIGHTS ARE PERMITTED. LIGHTING IF REQUIRED, WILL MEET FAA STANDARDS AND REQUIREMENTS.

ANTENNA MOUNTING

40. DESIGN AND CONSTRUCTION OF ANTENNA SUPPORTS SHALL CONFORM TO CURRENT ANSI/TIA-222 OR APPLICABLE LOCAL CODES.

41. ALL STEEL MATERIALS SHALL BE GALVANIZED AFTER FABRICATION IN ACCORDANCE WITH ASTM A123 "ZINC (HOT-DIP GALVANIZED) COATINGS ON IRON AND STEEL PRODUCTS", UNLESS NOTED OTHERWISE.

42. ALL BOLTS, ANCHORS AND MISCELLANEOUS HARDWARE SHALL BE GALVANIZED IN ACCORDANCE WITH ASTM A153 "ZINC-COATING (HOT-DIP) ON IRON AND STEEL HARDWARE", UNLESS NOTED OTHERWISE.

43. DAMAGED GALVANIZED SURFACES SHALL BE REPAIRED BY COLD GALVANIZING IN ACCORDANCE WITH ASTM A780.

44. ALL ANTENNA MOUNTS SHALL BE INSTALLED WITH LOCK NUTS, DOUBLE NUTS AND SHALL BE TORQUED TO MANUFACTURER'S RECOMMENDATIONS.

45. CONTRACTOR SHALL INSTALL ANTENNA PER MANUFACTURER'S RECOMMENDATION FOR INSTALLATION AND GROUNDING.

46. ALL UNUSED PORTS ON ANY ANTENNAS SHALL BE TERMINATED WITH A 50-OHM LOAD TO ENSURE ANTENNAS PERFORM AS DESIGNED.

47. PRIOR TO SETTING ANTENNA AZIMUTHS AND DOWNTILTS, ANTENNA CONTRACTOR SHALL CHECK THE ANTENNA MOUNT FOR TIGHTNESS AND ENSURE THAT THEY ARE PLUMB. ANTENNA AZIMUTHS SHALL BE SET FROM TRUE NORTH AND BE ORIENTED WITHIN +/- 5% AS DEFINED BY THE RFDS. ANTENNA DOWNTILTS SHALL BE WITHIN +/- 0.5% AS DEFINED BY THE RFDS. REFER TO ND-00246.

48. JUMPERS FROM THE TMA'S MUST TERMINATE TO OPPOSITE POLARIZATION'S IN EACH SECTOR.

49. CONTRACTOR SHALL RECORD THE SERIAL #, SECTOR, AND POSITION OF EACH ACTUATOR INSTALLED AT THE ANTENNAS AND PROVIDE THE INFORMATION TO AT&T.

50. TMA'S SHALL BE MOUNTED ON PIPE DIRECTLY BEHIND ANTENNAS AS CLOSE TO ANTENNA AS FEASIBLE IN A VERTICAL POSITION.

TORQUE REQUIREMENTS

51. ALL RF CONNECTIONS SHALL BE TIGHTENED BY A TORQUE WRENCH.

52. ALL RF CONNECTIONS, GROUNDING HARDWARE AND ANTENNA HARDWARE SHALL HAVE A TORQUE MARK INSTALLED IN A CONTINUOUS STRAIGHT LINE FROM BOTH SIDES OF THE CONNECTION.
    A. RF CONNECTION BOTH SIDES OF THE CONNECTOR.
    B. GROUNDING AND ANTENNA HARDWARE ON THE NUT SIDE STARTING FROM THE THREADS TO THE SOLID SURFACE. EXAMPLE OF SOLID SURFACE: GROUND BAR, ANTENNA BRACKET METAL.

FIBER & POWER CABLE MOUNTING

53. THE FIBER OPTIC TRUNK CABLES SHALL BE INSTALLED INTO CONDUITS, CHANNEL CABLE TRAYS, OR CABLE TRAY. WHEN INSTALLING FIBER OPTIC TRUNK CABLES INTO A CABLE TRAY SYSTEM, THEY SHALL BE INSTALLED INTO AN INTER DUCT AND A PARTITION BARRIER SHALL BE INSTALLED BETWEEN THE 600 VOLT CABLES AND THE INTER DUCT IN ORDER TO SEGREGATE CABLE TYPES. OPTIC FIBER TRUNK CABLES SHALL HAVE APPROVED CABLE RESTRAINTS EVERY (60) SIXTY FEET AND SECURELY FASTENED TO THE CABLE TRAY SYSTEM. NFPA 70 (NEC) ARTICLE 770 RULES SHALL APPLY.

54. THE TYPE TC-ER CABLES SHALL BE INSTALLED INTO CONDUITS, CHANNEL CABLE TRAYS, OR CABLE TRAY AND SHALL BE SECURED AT INTERVALS NOT EXCEEDING (6) SIX FEET. AN EXCEPTION; WHERE TYPE TC-ER CABLES ARE NOT SUBJECT TO PHYSICAL DAMAGE, CABLES SHALL BE PERMITTED TO MAKE A TRANSITION BETWEEN CONDUITS, CHANNEL CABLE TRAYS, OR CABLE TRAY WHICH ARE SERVING UTILIZATION EQUIPMENT OR DEVICES, A DISTANCE (6) SIX FEET SHALL NOT BE EXCEEDED WITHOUT CONTINUOUS SUPPORTING. NFPA 70 (NEC) ARTICLES 336 AND 392 RULES SHALL APPLY.

55. WHEN INSTALLING OPTIC FIBER TRUNK CABLES OR TYPE TC-ER CABLES INTO CONDUITS, NFPA 70 (NEC) ARTICLE 300 RULES SHALL APPLY.

56-61 RESERVED FOR ADDITIONAL NOTES.

COAXIAL CABLE NOTES

62. TYPES AND SIZES OF THE ANTENNA CABLE ARE BASED ON ESTIMATED LENGTHS. PRIOR TO ORDERING CABLE, CONTRACTOR SHALL VERIFY ACTUAL LENGTH BASED ON CONSTRUCTION LAYOUT AND NOTIFY THE PROJECT MANAGER IF ACTUAL LENGTHS EXCEED ESTIMATED LENGTHS.

63. CONTRACTOR SHALL VERIFY THE DOWN-TILT OF EACH ANTENNA WITH A DIGITAL LEVEL.

64. CONTRACTOR SHALL CONFIRM COAX COLOR CODING PRIOR TO CONSTRUCTION.

65. ALL JUMPERS TO THE ANTENNAS FROM THE MAIN TRANSMISSION LINE SHALL BE 1/2" DIA. LDF AND SHALL NOT EXCEED 6'-0".

66. ALL COAXIAL CABLE SHALL BE SECURED TO THE DESIGNED SUPPORT STRUCTURE, IN AN APPROVED MANNER, AT DISTANCES NOT TO EXCEED 4'-0" OC.

67. CONTRACTOR SHALL FOLLOW ALL MANUFACTURER'S RECOMMENDATIONS REGARDING BOTH THE INSTALLATION AND GROUNDING OF ALL COAXIAL CABLES, CONNECTORS, ANTENNAS, AND ALL OTHER EQUIPMENT.

68. CONTRACTOR SHALL GROUND ALL EQUIPMENT. INCLUDING ANTENNAS, RET MOTORS, TMA'S, COAX CABLES, AND RET CONTROL CABLES AS A COMPLETE SYSTEM. GROUNDING SHALL BE EXECUTED BY QUALIFIED WIREMEN IN COMPLIANCE WITH MANUFACTURER'S SPECIFICATION AND RECOMMENDATION.

69. CONTRACTOR SHALL PROVIDE STRAIN-RELIEF AND CABLE SUPPORTS FOR ALL CABLE ASSEMBLIES, COAX CABLES, AND RET CONTROL CABLES. CABLE STRAIN-RELIEFS AND CABLE SUPPORTS SHALL BE APPROVED FOR THE PURPOSE. INSTALLATION SHALL BE IN ACCORDANCE WITH MANUFACTURER'S SPECIFICATIONS AND RECOMMENDATIONS.

70. CONTRACTOR TO VERIFY THAT EXISTING COAX HANGERS ARE STACKABLE SNAP IN HANGERS. IF EXISTING HANGERS ARE NOT STACKABLE SNAP IN HANGERS THE CONTRACTOR SHALL REPLACE EXISTING HANGERS WITH NEW SNAP IN HANGERS IF APPLICABLE.

GENERAL CABLE AND EQUIPMENT NOTES

71. CONTRACTOR SHALL BE RESPONSIBLE TO VERIFY ANTENNA, TMAS, DIPLEXERS, AND COAX CONFIGURATION, MAKE AND MODELS PRIOR TO INSTALLATION.

72. ALL CONNECTIONS FOR HANGERS, SUPPORTS, BRACING, ETC. SHALL BE INSTALLED PER TOWER MANUFACTURER'S RECOMMENDATIONS.

73. CONTRACTOR SHALL REFERENCE THE TOWER STRUCTURAL ANALYSIS/DESIGN DRAWINGS FOR DIRECTIONS ON CABLE DISTRIBUTION/ROUTING.

74. ALL OUTDOOR RF CONNECTORS/CONNECTIONS SHALL BE WEATHERPROOFED, EXCEPT THE RET CONNECTORS, USING BUTYL TAPE AFTER INSTALLATION AND FINAL CONNECTIONS ARE MADE. BUTYL TAPE SHALL HAVE A MINIMUM OF ONE-HALF TAPE WIDTH OVERLAP ON EACH TURN AND EACH LAYER SHALL BE WRAPPED THREE TIMES. WEATHERPROOFING SHALL BE SMOOTH WITHOUT BUCKLING. BUTYL BLEEDING IS NOT ALLOWED.

75. IF REQUIRED TO PAINT ANTENNAS AND/OR COAX:
    A. TEMPERATURE SHALL BE ABOVE 50° F.
    B. PAINT COLOR MUST BE APPROVED BY BUILDING OWNER/LANDLORD.
    C. FOR REGULATED TOWERS, FAA/FCC APPROVED PAINT IS REQUIRED.
    D. DO NOT PAINT OVER COLOR CODING OR ON EQUIPMENT MODEL NUMBERS.

76. ALL CABLES SHALL BE GROUNDED WITH COAXIAL CABLE GROUND KITS. FOLLOW THE MANUFACTURER'S RECOMMENDATIONS.
    A. GROUNDING AT THE ANTENNA LEVEL.
    B. GROUNDING AT MID LEVEL, TOWERS WHICH ARE OVER 200'-0", ADDITIONAL CABLE GROUNDING REQUIRED.
    C. GROUNDING AT BASE OF TOWER PRIOR TO TURNING HORIZONTAL.
    D. GROUNDING OUTSIDE THE EQUIPMENT SHELTER AT ENTRY PORT.
    E. GROUNDING INSIDE THE EQUIPMENT SHELTER AT THE ENTRY PORT.

77. ALL PROPOSED GROUND BAR DOWNLEADS ARE TO BE TERMINATED TO THE EXISTING ADJACENT GROUND BAR DOWNLEADS A MINIMUM DISTANCE OF 4'-0" BELOW GROUND BAR. TERMINATIONS MAY BE EXOTHERMIC OR COMPRESSION.

THE INFORMATION CONTAINED IN THIS SET OF CONSTRUCTION DOCUMENTS IS PROPRIETARY BY NATURE. ANY USE OR DISCLOSURE OTHER THAN THAT WHICH RELATES TO CARRIER SERVICES IS STRICTLY PROHIBITED.

AT&T
930 NATIONAL PARKWAY
SCHAUMBURG, IL 60173

SAC WIRELESS
540 W. MADISON ST.
9TH FLOOR
CHICAGO, IL 60661
www.sacw.com
312.895.4977

A&E
RAMAKER & ASSOCIATES, INC.
855 Community Dr, Sauk City, WI 53583
608-643-4100 www.Ramaker.com
Sauk City, WI · Willmar, MN
Woodcliff Lake, NJ · Bayamon, PR
RA#:44993

LTE 6C/5G NR UPGRADE/ SBWE RRH SWAP
10080263
AWE – LAKE GENEVA WATER TOWER
1005 HOST DR. (AKA 1003 HOST DR.)
LAKE GENEVA, WI 53147

REVISIONS

REV.	DATE	DESCRIPTION	INITIALS
0	10/14/19	FOR CONSTRUCTION	CF
A	09/18/19	ISSUED FOR REVIEW	CF

NOT FOR CONSTRUCTION UNLESS LABELED AS FOR CONSTRUCTION

ENGINEER CERTIFICATION & SEAL:
I HEREBY CERTIFY THAT THIS PLAN, SPECIFICATION, OR REPORT WAS PREPARED BY ME OR UNDER MY DIRECT SUPERVISION AND THAT I AM A DULY LICENSED PROFESSIONAL ENGINEER UNDER THE LAWS OF THE STATE OF WISCONSIN.
Signature: Joshua M Opsteg Date: 10/14/2019

SHEET TITLE: NOTES & SPECIFICATIONS

SHEET NUMBER: SP1

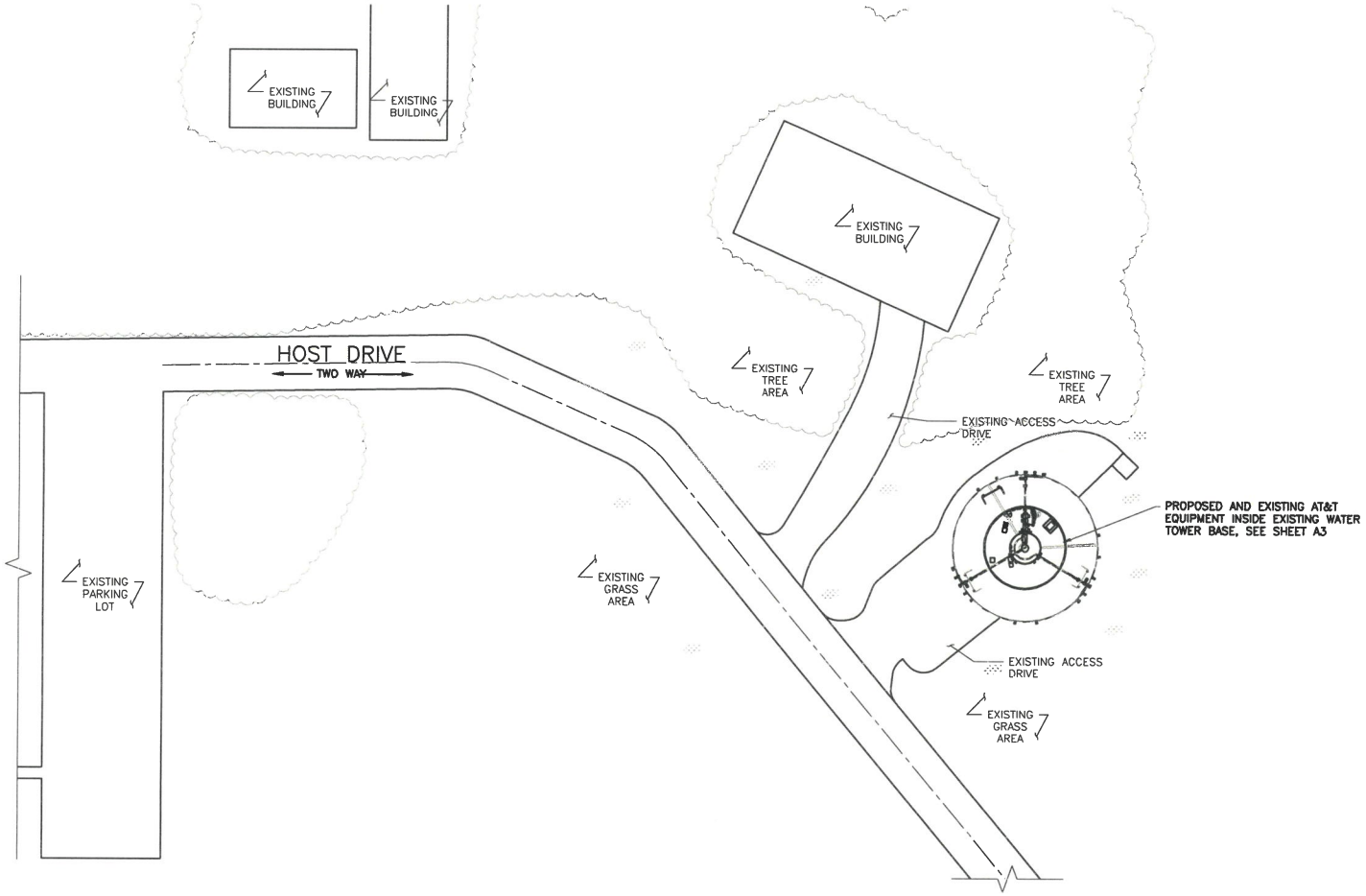

LATITUDE: 42° 34' 45.2" N (42.57921°)

LONGITUDE: 88° 25' 01.9" W (-88.41720°)

NORTH

OVERALL SITE PLAN

0 10' 20' 30'

SCALE: 1/32" = 1'-0" (24x36)
(OR) 1/64" = 1'-0" (11x17)

1

AT&T
930 NATIONAL PARKWAY
SCHAUMBURG, IL 60173

SAC WIRELESS
540 W. MADISON ST.
9TH FLOOR
CHICAGO, IL 60661
www.sacw.com
312.895.4877

A&E
RAMAKER & ASSOCIATES, INC.
855 Community Dr, Sauk City, WI 53583
608-643-4100 www.Ramaker.com
Sauk City, WI · Willmar, MN
Woodcliff Lake, NJ · Bayamon, PR
RA#:44993

LTE 6C/5G NR UPGRADE/ SBWE RRH SWAP
10080263
AWE – LAKE GENEVA WATER TOWER
1005 HOST DR. (AKA 1003 HOST DR.)
LAKE GENEVA, WI 53147

REVISIONS

REV.	DATE	DESCRIPTION	INITIALS
0	10/14/19	FOR CONSTRUCTION	CF
A	09/18/19	ISSUED FOR REVIEW	CF

NOT FOR CONSTRUCTION UNLESS LABELED AS FOR CONSTRUCTION

ENGINEER CERTIFICATION & SEAL:

I HEREBY CERTIFY THAT THIS PLAN, SPECIFICATION, OR REPORT WAS PREPARED BY ME OR UNDER MY DIRECT SUPERVISION AND THAT I AM A DULY LICENSED PROFESSIONAL ENGINEER UNDER THE LAWS OF THE STATE OF WISCONSIN.

Joshua M Opsteegh 10/14/2019
Signature: Date:

SHEET TITLE
OVERALL SITE PLAN

SHEET NUMBER
A0

THE INFORMATION CONTAINED IN THIS SET OF CONSTRUCTION DOCUMENTS IS PROPRIETARY BY NATURE. ANY USE OR DISCLOSURE OTHER THAN THAT WHICH RELATES TO CARRIER SERVICES IS STRICTLY PROHIBITED.

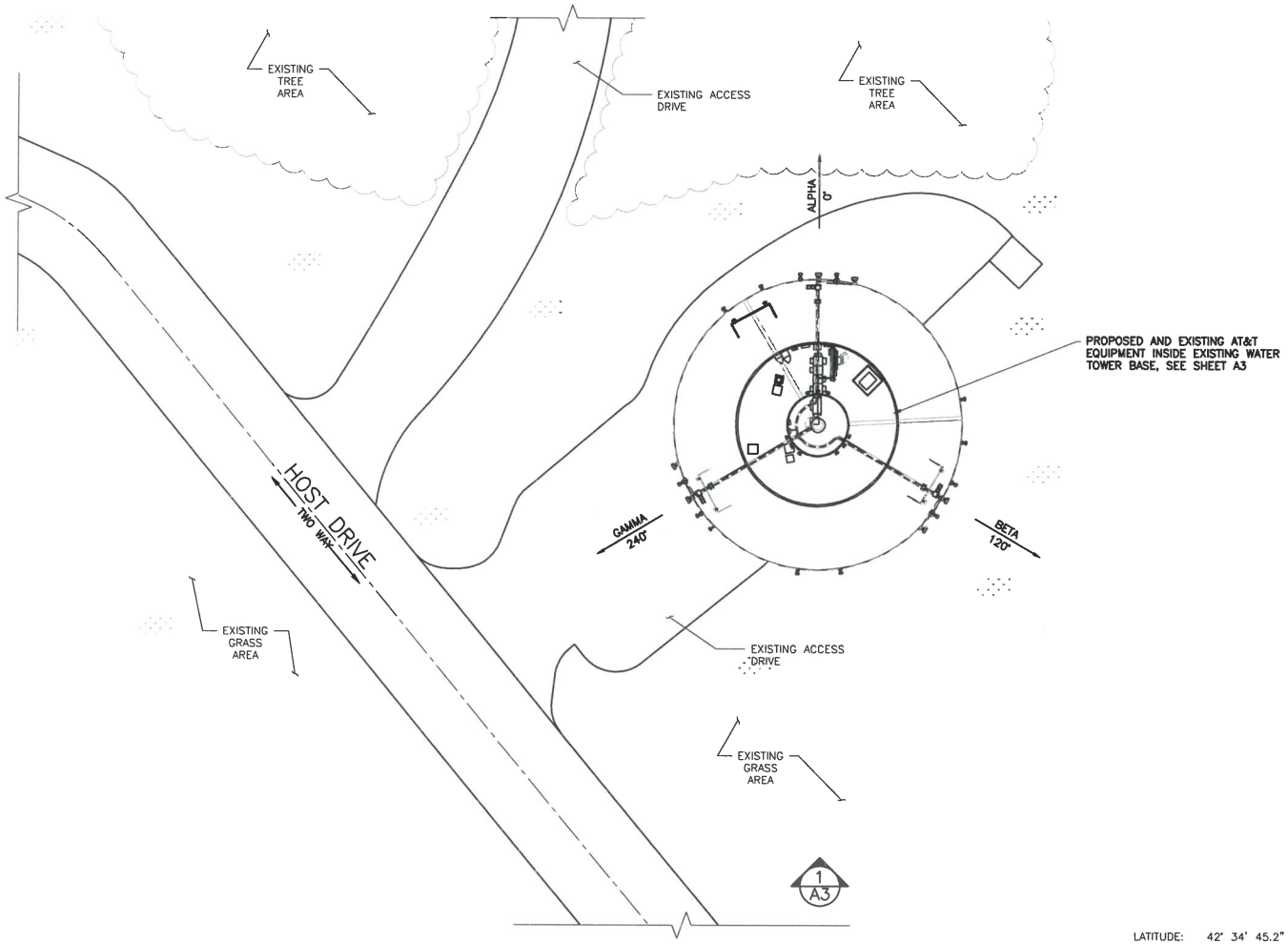

LATITUDE: 42° 34' 45.2" N (42.57921°)

LONGITUDE: 88° 25' 01.9" W (−88.41720°)

NORTH

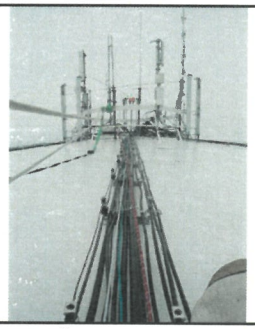

SITE PHOTO 2 | 2

SITE PHOTO 1 | 1

COMPOUND PLAN

0 10' 20' 30'

SCALE: 1/32" = 1'-0" (24x36)
(OR) 1/64" = 1'-0" (11x17)

3

AT&T
930 NATIONAL PARKWAY
SCHAUMBURG, IL 60173

SAC WIRELESS
540 W. MADISON ST.
9TH FLOOR
CHICAGO, IL 60661
www.sacw.com
312.895.4977

A&E RAMAKER & ASSOCIATES, INC.
855 Community Dr, Sauk City, WI 53583
608-643-4100 www.Ramaker.com
Sauk City, WI · Willmar, MN
Woodcliff Lake, NJ · Bayamon, PR
RA#:44993

LTE 6C/5G NR UPGRADE/ SBWE RRH SWAP
10080263
AWE – LAKE GENEVA WATER TOWER
1005 HOST DR. (AKA 1003 HOST DR.)
LAKE GENEVA, WI 53147

REVISIONS

REV.	DATE	DESCRIPTION	INITIALS
0	10/14/19	FOR CONSTRUCTION	CF
A	09/18/19	ISSUED FOR REVIEW	CF

NOT FOR CONSTRUCTION UNLESS LABELED AS FOR CONSTRUCTION

ENGINEER CERTIFICATION & SEAL:

I HEREBY CERTIFY THAT THIS PLAN, SPECIFICATION, OR REPORT WAS PREPARED BY ME OR UNDER MY DIRECT SUPERVISION AND THAT I AM A DULY LICENSED PROFESSIONAL ENGINEER UNDER THE LAWS OF THE STATE OF WISCONSIN.

Joshua M Oporto 10/14/2019
Signature: Date:

SHEET TITLE
COMPOUND PLAN

SHEET NUMBER
A1

THE INFORMATION CONTAINED IN THIS SET OF CONSTRUCTION DOCUMENTS IS PROPRIETARY BY NATURE. ANY USE OR DISCLOSURE OTHER THAN THAT WHICH RELATES TO CARRIER SERVICES IS STRICTLY PROHIBITED.

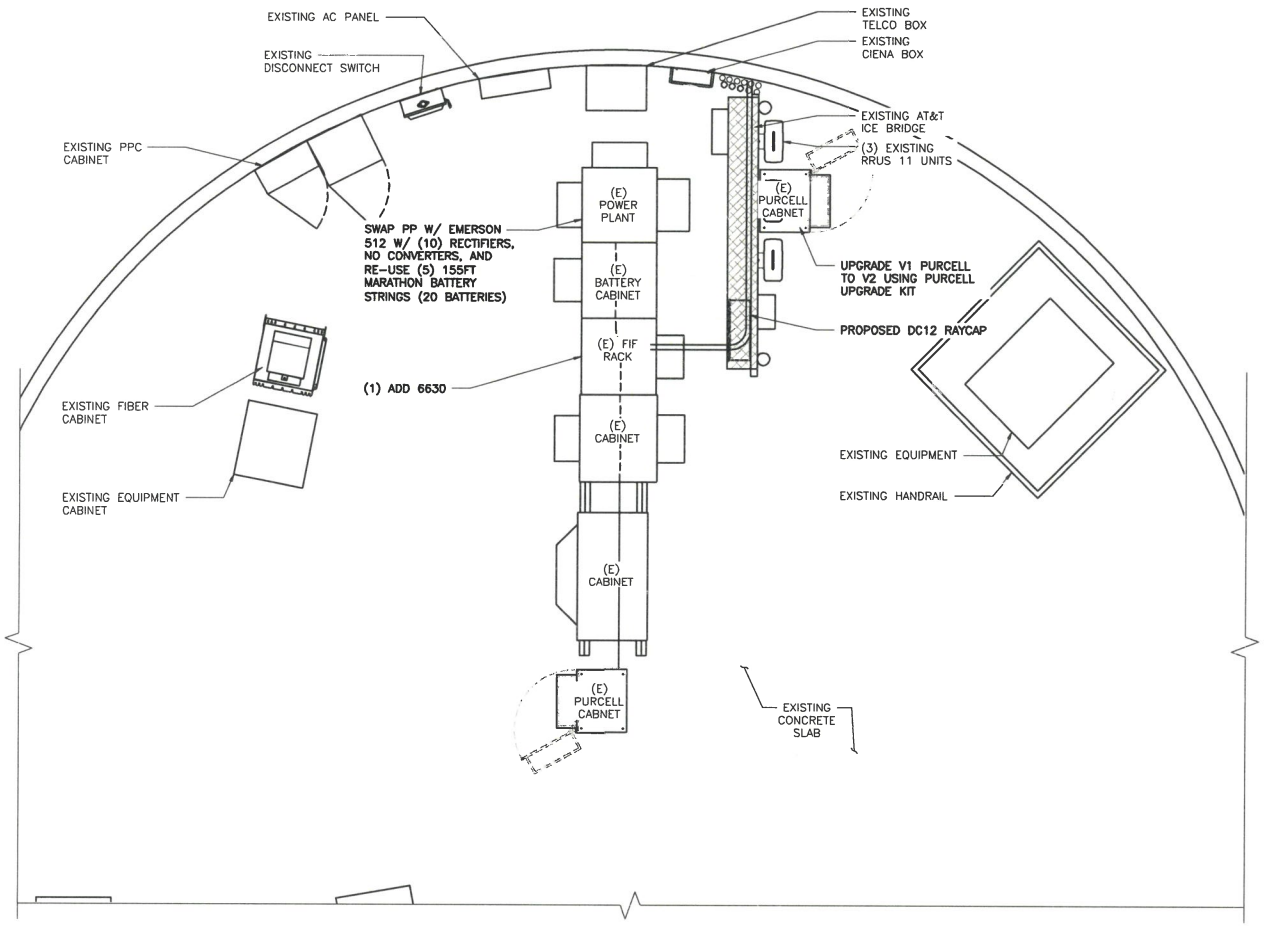

LTE 6C 700 FNET GROUND SCOPE:
ADD (1) 6630, IDLE CABLE, SFPS.

5G NR UPGRADE GROUND SCOPE:
ADD GPS SPLITTER, SFPS, AND (1) OUTDOOR DC12 RAYCAP.
DECOM & REMOVE EXIST GEN1 DC12 RAYCAP FROM PP CABINET AND RE-PLUMB ASSOCIATED DC TRUNKS TO PROPOSED DC12.
SWAP PP W/ EMERSON 512 W/ (10) RECTIFIERS, NO CONVERTERS, AND RE-USE (5) 155FT MARATHON BATTERY STRINGS (20 BATTERIES). UPGRADE V1 PURCELL TO V2 USING PURCELL UPGRADE KIT.

AWS RRU SWAP GROUND SCOPE:
ADD SFPS.

LATITUDE: 42° 34' 45.2" N (42.57921°)
LONGITUDE: 88° 25' 01.9" W (-88.41720°)

NORTH

EQUIPMENT PLAN

0 1' 2' 4'
SCALE: 1/4" = 1'-0" (24x36)
(OR) 1/8" = 1'-0" (11x17)

1

AT&T
930 NATIONAL PARKWAY
SCHAUMBURG, IL 60173

SAC WIRELESS
540 W. MADISON ST.
37TH FLOOR
CHICAGO, IL 60661
www.sacw.com
312.905.4977

A&E
RAMAKER & ASSOCIATES, INC.
855 Community Dr, Sauk City, WI 53583
608-643-4100 www.Ramaker.com
Sauk City, WI · Willmar, MN
Woodcliff Lake, NJ · Bayamon, PR
RA#:44993

LTE 6C/5G NR UPGRADE/ SBWE RRH SWAP
10080263
AWE – LAKE GENEVA WATER TOWER
1005 HOST DR. (AKA 1003 HOST DR.)
LAKE GENEVA, WI 53147

REVISIONS

REV.	DATE	DESCRIPTION	INITIALS
0	10/14/19	FOR CONSTRUCTION	CF
A	09/18/19	ISSUED FOR REVIEW	CF

NOT FOR CONSTRUCTION UNLESS LABELED AS FOR CONSTRUCTION

ENGINEER CERTIFICATION & SEAL:
I HEREBY CERTIFY THAT THIS PLAN, SPECIFICATION, OR REPORT WAS PREPARED BY ME OR UNDER MY DIRECT SUPERVISION AND THAT I AM A DULY LICENSED PROFESSIONAL ENGINEER UNDER THE LAWS OF THE STATE OF WISCONSIN.

Signature: Joshua M Sparks Date: 10/14/2019

SHEET TITLE
EQUIPMENT PLAN

SHEET NUMBER
A2

THE INFORMATION CONTAINED IN THIS SET OF CONSTRUCTION DOCUMENTS IS PROPRIETARY BY NATURE. ANY USE OR DISCLOSURE OTHER THAN THAT WHICH RELATES TO CARRIER SERVICES IS STRICTLY PROHIBITED.

- TOWER STRUCTURAL CALCULATIONS PREPARED BY OTHERS. CONTRACTOR TO VERIFY WITH PROJECT MANAGER TO OBTAIN A COPY
- CONTRACTOR TO REFER TO TOWER STRUCTURAL CALCULATIONS FOR ADDITIONAL LOADS. NO ERECTION OR MODIFICATION OF TOWER SHALL BE MADE WITHOUT APPROVAL OF STRUCTURAL ENGINEER.

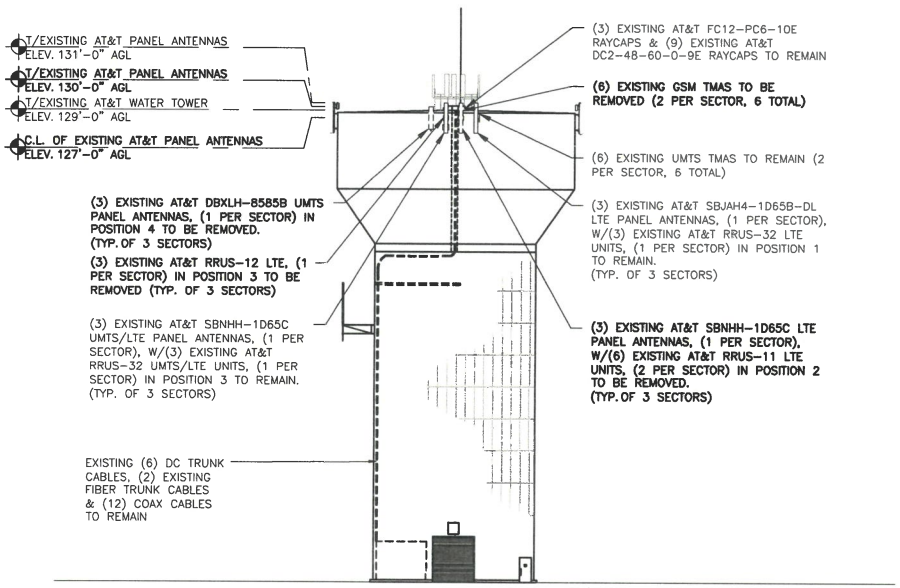

EXISTING TOWER ELEVATION

0 10' 20' 30' SCALE: 1/32" = 1'-0" (24x36) (OR) 1/64" = 1'-0" (11x17) 2

NOTE:
NEW ANTENNA TIP HEIGHT NOT TO EXCEED EXISTING ANTENNA TIP HEIGHT

NOTE:
GENERAL CONTRACTOR SHALL MAKE SURE SAFETY CLIMB IS 100% FREE OF COAX AND MOUNTS AFTER INSTALL IS COMPLETE.

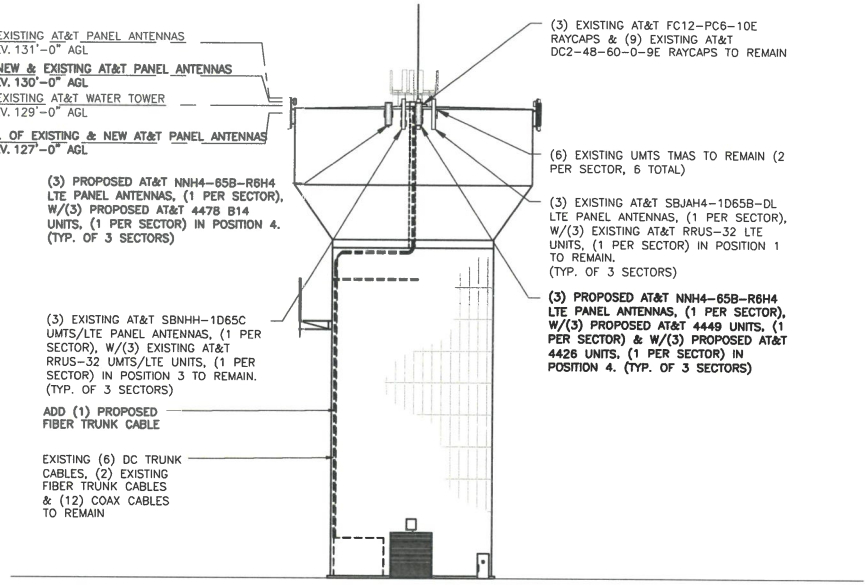

PROPOSED TOWER ELEVATION

0 10' 20' 30' SCALE: 1/32" = 1'-0" (24x36) (OR) 1/64" = 1'-0" (11x17) 1

AT&T
930 NATIONAL PARKWAY
SCHAUMBURG, IL 60173

SAC WIRELESS
540 W. MADISON ST.
9TH FLOOR
CHICAGO, IL 60661
www.sacw.com
312.895.4877

A&E
RAMAKER & ASSOCIATES, INC.
855 Community Dr, Sauk City, WI 53583
608-643-4100 www.Ramaker.com
Sauk City, WI • Willmar, MN
Woodcliff Lake, NJ • Bayamon, PR
RA#:44993

LTE 6C/5G NR UPGRADE/ SBWE RRH SWAP
10080263
AWE – LAKE GENEVA WATER TOWER
1005 HOST DR. (AKA 1003 HOST DR.)
LAKE GENEVA, WI 53147

REVISIONS

REV.	DATE	DESCRIPTION	INITIALS
0	10/14/19	FOR CONSTRUCTION	CF
A	09/18/19	ISSUED FOR REVIEW	CF

NOT FOR CONSTRUCTION UNLESS LABELED AS FOR CONSTRUCTION

ENGINEER CERTIFICATION & SEAL:
I HEREBY CERTIFY THAT THIS PLAN, SPECIFICATION, OR REPORT WAS PREPARED BY ME OR UNDER MY DIRECT SUPERVISION AND THAT I AM A DULY LICENSED PROFESSIONAL ENGINEER UNDER THE LAWS OF THE STATE OF WISCONSIN.

Joshua M Cpacko 10/14/2019
Signature: Date:

SHEET TITLE
TOWER ELEVATION

SHEET NUMBER
A3

THE INFORMATION CONTAINED IN THIS SET OF CONSTRUCTION DOCUMENTS IS PROPRIETARY BY NATURE. ANY USE OR DISCLOSURE OTHER THAN THAT WHICH RELATES TO CARRIER SERVICES IS STRICTLY PROHIBITED.

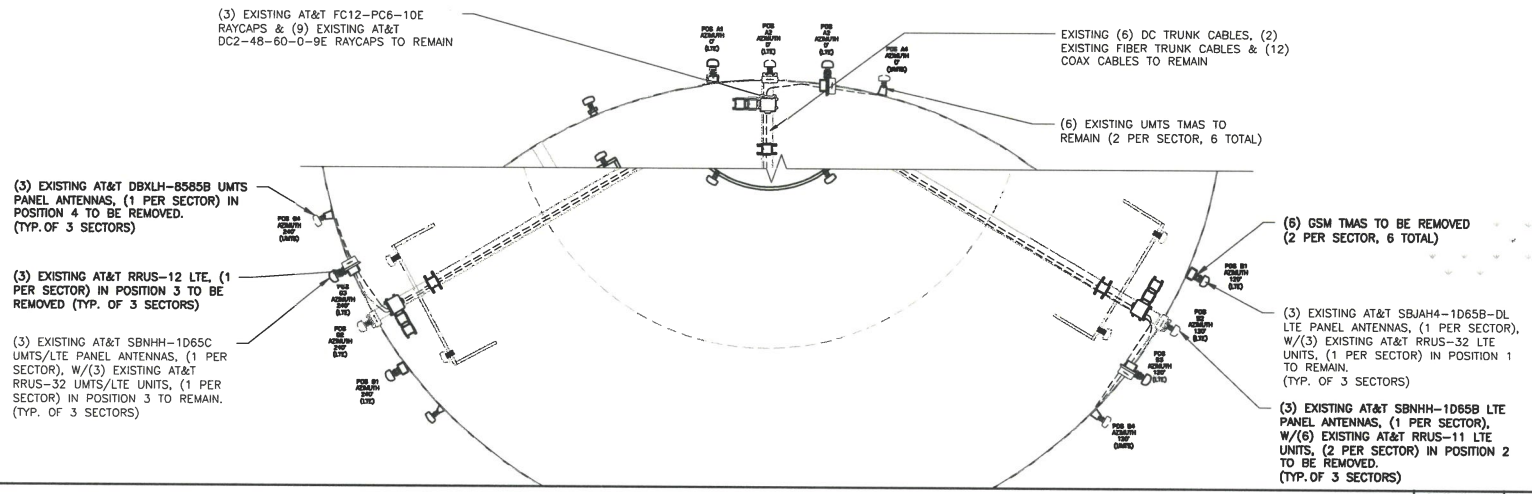

EXISTING ANTENNA PLAN

SCALE: 3/32" = 1'-0" (24x36) (OR) 3/64" = 1'-0" (11x17) — 2

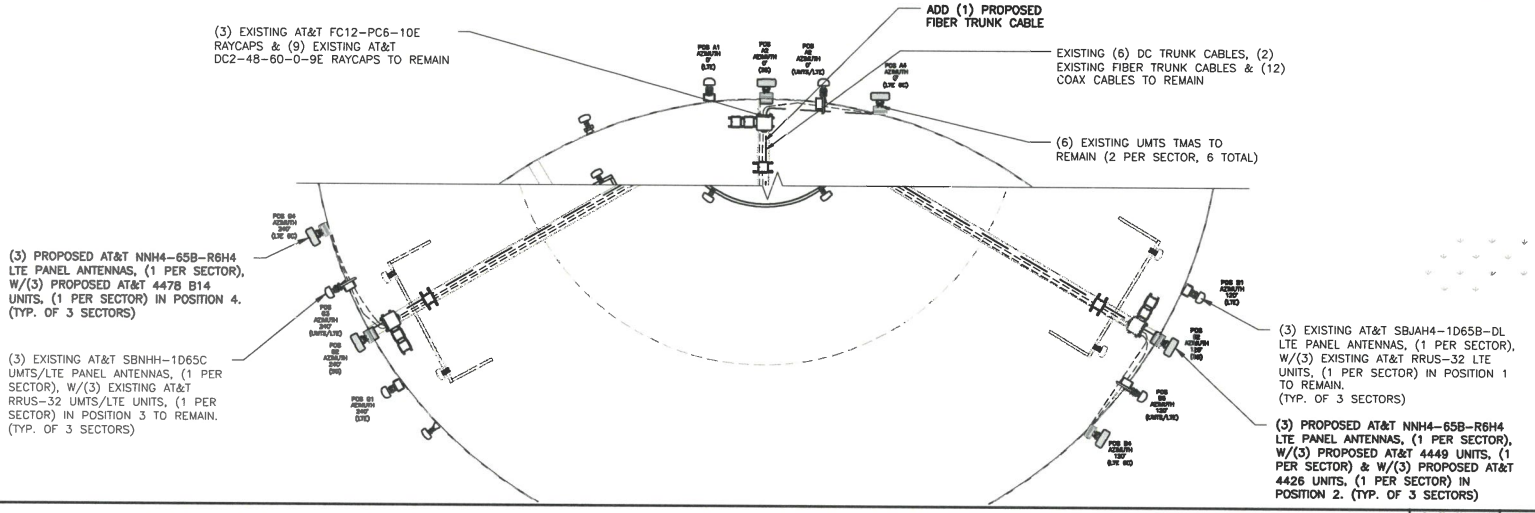

PROPOSED ANTENNA PLAN

SCALE: 3/32" = 1'-0" (24x36) (OR) 3/64" = 1'-0" (11x17) — 1

AT&T
930 NATIONAL PARKWAY
SCHAUMBURG, IL 60173

SAC WIRELESS
540 W. MADISON ST.
9TH FLOOR
CHICAGO, IL 60661
www.sacw.com
312.895.4977

AME RAMAKER & ASSOCIATES, INC.
855 Community Dr, Sauk City, WI 53583
608-643-4100 www.Ramaker.com
Sauk City, WI · Willmar, MN · Woodcliff Lake, NJ · Bayamon, PR
RA#:44993

LTE 6C/5G NR UPGRADE/ SBWE RRH SWAP
10080263
AWE – LAKE GENEVA WATER TOWER
1005 HOST DR. (AKA 1003 HOST DR.)
LAKE GENEVA, WI 53147

REVISIONS

REV.	DATE	DESCRIPTION	INITIALS
0	10/14/19	FOR CONSTRUCTION	CF
A	09/18/19	ISSUED FOR REVIEW	CF

NOT FOR CONSTRUCTION UNLESS LABELED AS FOR CONSTRUCTION

ENGINEER CERTIFICATION & SEAL:
I HEREBY CERTIFY THAT THIS PLAN, SPECIFICATION, OR REPORT WAS PREPARED BY ME OR UNDER MY DIRECT SUPERVISION AND THAT I AM A DULY LICENSED PROFESSIONAL ENGINEER UNDER THE LAWS OF THE STATE OF WISCONSIN.

Joshua M Sparks 10/14/2019
Signature: Date:

SHEET TITLE: ANTENNA PLAN

SHEET NUMBER: A4

THE INFORMATION CONTAINED IN THIS SET OF CONSTRUCTION DOCUMENTS IS PROPRIETARY BY NATURE. ANY USE OR DISCLOSURE OTHER THAN THAT WHICH RELATES TO CARRIER SERVICES IS STRICTLY PROHIBITED.

1. CONTRACTOR IS TO REFER TO AT&T'S MOST CURRENT RADIO FREQUENCY DATA SHEET (RFDS) PRIOR TO CONSTRUCTION.
2. THE SIZE, HEIGHT, AND DIRECTION OF THE ANTENNAS SHALL BE ADJUSTED TO ACHIEVE THE AZIMUTHS SPECIFIED AND LIMIT SHADOWING AND TO MEET THE SYSTEM REQUIREMENTS.
3. CONTRACTOR SHALL VERIFY THE HEIGHT OF THE ANTENNA WITH THE AT&T WIRELESS PROJECT MANAGER.
4. VERIFY TYPE AND SIZE OF TOWER LEG PRIOR TO ORDERING ANY ANTENNA MOUNT.
5. UNLESS NOTED OTHERWISE THE CONTRACTOR MUST PROVIDE ALL MATERIAL NECESSARY.
6. ANTENNA AZIMUTHS ARE DEGREES OFF OF TRUE NORTH, BEARING CLOCKWISE, IN WHICH ANTENNA FACE IS DIRECTED. ALL ANTENNAS (AND SUPPORTING STRUCTURES AS PRACTICAL) SHALL BE ACCURATELY ORIENTED IN THE SPECIFIED DIRECTION.
7. CONTRACTOR SHALL VERIFY ALL RF INFORMATION PRIOR TO CONSTRUCTION.
8. SWEEP TEST SHALL BE PERFORMED BY GENERAL CONTRACTOR AND SUBMITTED TO AT&T WIRELESS CONSTRUCTION SPECIALIST. TEST SHALL BE PERFORMED PER AT&T WIRELESS STANDARDS.
9. CABLE LENGTHS WERE DETERMINED BASED ON THE DESIGN DRAWING. CONTRACTOR TO VERIFY ACTUAL LENGTH DURING PRE-CONSTRUCTION WALK.
10. CONTRACTOR TO USE ROSENBERGER FIBER LINE HANGER COMPONENTS (OR ENGINEER APPROVED EQUAL).

ANTENNA & CABLING NOTES — NO SCALE — 4

RF, DC, & COAX CABLE MARKING LOCATIONS TABLE

NO	LOCATIONS
1	EACH TOP-JUMPER SHALL BE COLOR CODED WITH (1) SET OF 3" WIDE BANDS.
2	EACH MAIN COAX SHALL BE COLOR CODED WITH (1) SET OF 3" WIDE BANDS NEAR THE TOP-JUMPER CONNECTION AND WITH (1) SET OF 3/4" WIDE COLOR BANDS JUST PRIOR TO ENTERING THE BTS OR TRANSMITTER BUILDING.
3	CABLE ENTRY PORT ON THE INTERIOR OF THE SHELTER.
4	ALL BOTTOM JUMPERS SHALL BE COLOR CODED WITH (1) SET OF 3/4" WIDE BANDS ON EACH END OF THE BOTTOM JUMPER.
5	ALL BOTTOM JUMPERS SHALL BE COLOR CODED WITH (1) SET OF 3/4" WIDE BANDS ON EACH END OF THE BOTTOM JUMPER.

CABLE MARKING DIAGRAM — NO SCALE — 5

1. THE ANTENNA SYSTEM COAX SHALL BE LABELED WITH VINYL TAPE.
2. THE STANDARD IS BASED ON EIGHT COLORED TAPES-RED, BLUE, GREEN, YELLOW, ORANGE, BROWN, WHITE, AND VIOLET. THESE TAPES MUST BE 3/4" WIDE & UV RESISTANT SUCH AS SCOTCH 35 VINYL ELECTRICAL COLOR CODING TAPE AND SHOULD BE READILY AVAILABLE TO THE ELECTRICIAN OR CONTRACTOR ON SITE.
3. USING COLOR BANDS ON THE CABLES, MARK ALL RF CABLE BY SECTOR AND CABLE NUMBER AS SHOWN ON "CABLE COLOR CHART".
4. WHEN AN EXISTING COAXIAL LINE THAT IS INTENDED TO BE A SHARED LINE BETWEEN TECHNOLOGIES IS ENCOUNTERED, THE CONTRACTOR SHALL REMOVE THE EXISTING COLOR CODING SCHEME AND REPLACE IT WITH THE COLOR CODING STANDARD. IN THE ABSENCE OF AN EXISTING COLOR CODING AND TAGGING SCHEME, OR WHEN INSTALLING PROPOSED COAXIAL CABLES, THIS GUIDELINE SHALL BE IMPLEMENTED AT THAT SITE REGARDLESS OF TECHNOLOGY.
5. ALL COLOR CODE TAPE SHALL BE 3M-35 AND SHALL BE INSTALLED USING A MINIMUM OF (3) THREE WRAPS OF TAPE AND SHALL BE NEATLY TRIMMED AND SMOOTHED OUT SO AS TO AVOID UNRAVELING.
6. ALL COLOR BANDS INSTALLED AT THE TOP OF THE TOWER SHALL BE A MINIMUM OF 3" WIDE, AND SHALL HAVE A MINIMUM OF 3/4" OF SPACE BETWEEN EACH COLOR.
7. ALL COLOR CODES SHALL BE INSTALLED SO AS TO ALIGN NEATLY WITH ONE ANOTHER FROM SIDE-TO-SIDE.
8. IF EXISTING CABLES AT THE SITE ALREADY HAVE A COLOR CODING SCHEME AND THEY ARE NOT INTENDED TO BE REUSED OR SHARED WITH THE NEW TECHNOLOGY, THE EXISTING COLOR CODING SCHEME SHALL REMAIN UNTOUCHED.

CABLE MARKING NOTES — NO SCALE — 6

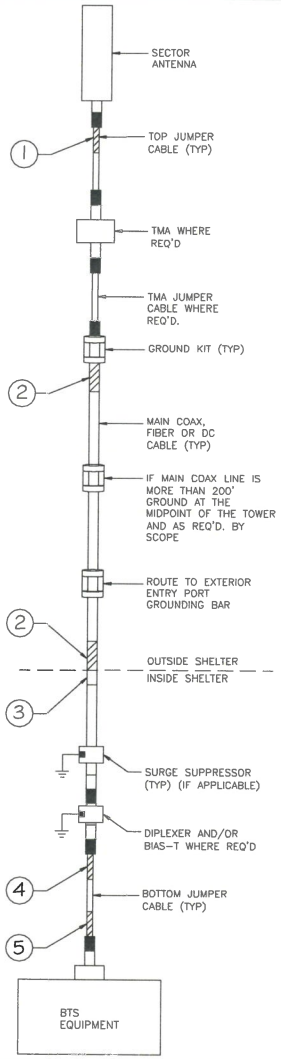

CABLE COLOR CODING DIAGRAM — NO SCALE — 3

NOT USED — NO SCALE — 2

NOT USED — NO SCALE — 1

THE INFORMATION CONTAINED IN THIS SET OF CONSTRUCTION DOCUMENTS IS PROPRIETARY BY NATURE. ANY USE OR DISCLOSURE OTHER THAN THAT WHICH RELATES TO CARRIER SERVICES IS STRICTLY PROHIBITED.

AT&T
930 NATIONAL PARKWAY
SCHAUMBURG, IL 60173

SAC WIRELESS
540 W. MADISON ST.
8TH FLOOR
CHICAGO, IL 60661
www.sacw.com
312.895.4977

A&E RAMAKER & ASSOCIATES, INC.
855 Community Dr, Sauk City, WI 53583
608-643-4100 www.Ramaker.com
Sauk City, WI · Willmar, MN · Woodcliff Lake, NJ · Bayamon, PR
RAA#44993

LTE 6C/5G NR UPGRADE/ SBWE RRH SWAP
10080263
AWE – LAKE GENEVA WATER TOWER
1005 HOST DR. (AKA 1003 HOST DR.)
LAKE GENEVA, WI 53147

REVISIONS

REV.	DATE	DESCRIPTION	INITIALS
0	10/14/19	FOR CONSTRUCTION	CF
A	09/18/19	ISSUED FOR REVIEW	CF

NOT FOR CONSTRUCTION UNLESS LABELED AS FOR CONSTRUCTION

ENGINEER CERTIFICATION & SEAL:
I HEREBY CERTIFY THAT THIS PLAN, SPECIFICATION, OR REPORT WAS PREPARED BY ME OR UNDER MY DIRECT SUPERVISION AND THAT I AM A DULY LICENSED PROFESSIONAL ENGINEER UNDER THE LAWS OF THE STATE OF WISCONSIN.
Signature: Joshua M Cporte Date: 10/14/2019

SHEET TITLE: CABLE NOTES & COLOR CODING

SHEET NUMBER: A5

THE INFORMATION CONTAINED IN THIS SET OF CONSTRUCTION DOCUMENTS IS PROPRIETARY BY NATURE. ANY USE OR DISCLOSURE OTHER THAN THAT WHICH RELATES TO CARRIER SERVICES IS STRICTLY PROHIBITED.

NOT USED — NOT TO SCALE — 6

ERICCSON RRUS 4478 B14

DIMENSIONS, HxWxD: 16.5"X13.4"x7.7"

WEIGHT, WITHOUT MOUNTING KIT: 27.2 kg (59.9 lbs)

STACKING OF RRH'S IS NOT PERMITTED.
NO PAINTING OF RRU'S IS ALLOWED.

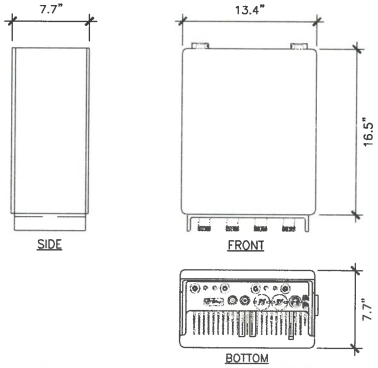

LTE 6C RRUSS DETAIL — NOT TO SCALE — 4

ERICSSON RRUS 4449 B5/B12
DIMENSIONS, HxWxD: 17.9"x13.19"x9.44"
INCL. HANDLES, FEET AND SUNSHIELD, W/O FAN UNIT.

WEIGHT, WITHOUT MOUNTING KIT: 71 lbs (32.0 kg)

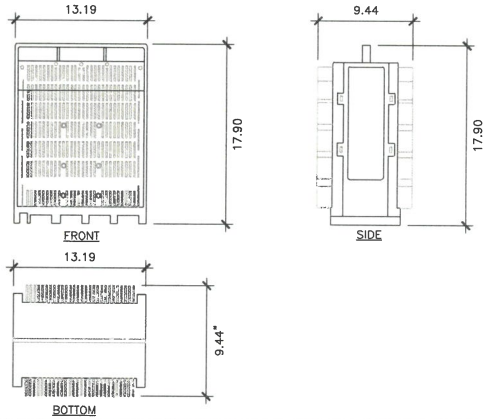

LTE 5G RRUSS DETAIL — NOT TO SCALE — 2

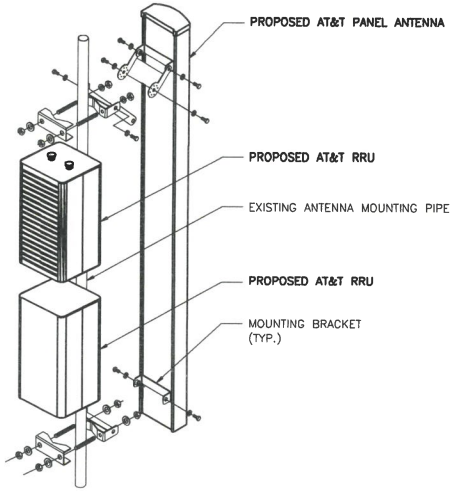

ANTENNA AND RRUSS MOUNTING DETAIL — NOT TO SCALE — 5

ERICCSON RRUS 4426 B66

DIMENSIONS, HxWxD: 14.96"X13.19"x5.8"

WEIGHT, WITHOUT MOUNTING KIT: 22 kg (48.4 lbs)

STACKING OF RRH'S IS NOT PERMITTED.
NO PAINTING OF RRU'S IS ALLOWED.

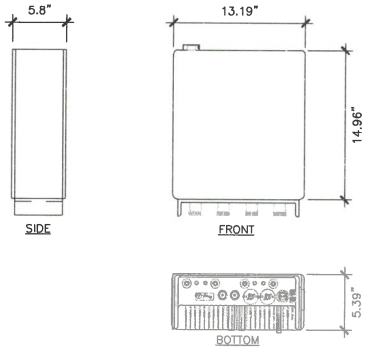

LTE 5G RRUSS DETAIL — NOT TO SCALE — 3

COMMSCOPE ANTENNAS NNH4-65B-R6H4

DIMENSIONS, HXWXD:	72"X19.6"X7.8"
SURVIVAL WIND SPEED:	>93 MPH
WEIGHT, WITHOUT MOUNTING:	83.3 LBS. (37.8 kg)
CONNECTOR:	8-PIN DIN FEMALE 8-PIN DIN MALE
CONNECTOR POSITION:	BOTTOM
MOUNTING POLE:	2.4-4.5 INCHES

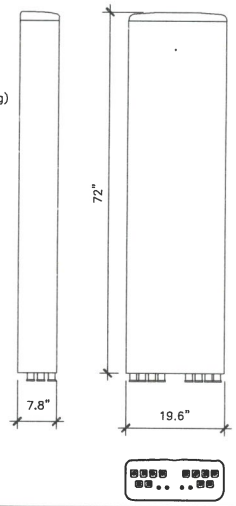

LTE 6C/5G ANTENNA DETAIL — NOT TO SCALE — 1

AT&T
930 NATIONAL PARKWAY
SCHAUMBURG, IL 60173

SAC WIRELESS
540 W. MADISON ST.
37TH FLOOR
CHICAGO, IL 60661
www.sacw.com
312.895.4877

A&E
RAMAKER & ASSOCIATES, INC.
855 Community Dr, Sauk City, WI 53583
608-643-4100 www.Ramaker.com
Sauk City, WI · Willmar, MN
Woodcliff Lake, NJ · Bayamon PR
RA#:44993

LTE 6C/5G NR UPGRADE/ SBWE RRH SWAP
10080263
AWE – LAKE GENEVA WATER TOWER
1005 HOST DR. (AKA 1003 HOST DR.)
LAKE GENEVA, WI 53147

REVISIONS

REV.	DATE	DESCRIPTION	INITIALS
D	10/14/19	FOR CONSTRUCTION	CF
A	09/18/19	ISSUED FOR REVIEW	CF

NOT FOR CONSTRUCTION UNLESS LABELED AS FOR CONSTRUCTION

ENGINEER CERTIFICATION & SEAL:
I HEREBY CERTIFY THAT THIS PLAN, SPECIFICATION, OR REPORT WAS PREPARED BY ME OR UNDER MY DIRECT SUPERVISION AND THAT I AM A DULY LICENSED PROFESSIONAL ENGINEER UNDER THE LAWS OF THE STATE OF WISCONSIN.

Joshua M Opsata 10/14/2019
Signature: Date:

SHEET TITLE
ANTENNA, RRUSS AND MOUNTING DETAILS

SHEET NUMBER
A6

PROPOSED ANTENNA CONFIGURATION AND CABLE SCHEDULE

SECTOR	POS	TECH	ANTENNA	ANTENNA ℄ HEIGHT	AZ	TMA/RRU	DC SURGE AND DISTRIBUTION	CABLE TYPE	CABLE LENGTH	DOWNTILTS
A	1	LTE	COMMSCOPE (X) SBJAH4-1D65B-DL	127' AGL	0°	(1) RRUS 32 (X)	(3) RAYCAP (X) FC12-PC6-10E (9) RAYCAP (X) DC2-48-60-0-9E	(6) DC TRUNK LINES (X) (2) FIBER TRUNK LINE (X) **(1) FIBER TRUNK LINE (N)** (2) COAX (X)	185'	0
	2	5G	**COMMSCOPE (N) NNH4-65B-R6H4**		0°	**(1) RRUS 4449 B5/B12 (N) (1) RRUS 4426 B66 (N)**		DC TRUNK (SHARED W/A1) FIBER TRUNK (SHARED W/A1)		0
	3	UMTS/LTE	COMMSCOPE (X) SBNHH-1D65C		0°	(1) RRUS 32 B2 (X)		DC TRUNK (SHARED W/A1) FIBER TRUNK (SHARED W/A1)		
	4	LTE 6C	**COMMSCOPE (N) NNH4-65B-R6H4**		0°	**(1) RRUS 4478 B14 (N)** (2) TMA (X)		DC TRUNK (SHARED W/A1) FIBER TRUNK (SHARED W/A1) (2) COAX (X)		0
B	1	LTE	COMMSCOPE (X) SBJAH4-1D65B-DL	127' AGL	120°	(1) RRUS 32 (X)		DC TRUNK (SHARED W/A1) FIBER TRUNK (SHARED W/A1) (2) COAX (X)	185'	0
	2	5G	**COMMSCOPE (N) NNH4-65B-R6H4**		120°	**(1) RRUS 4449 B5/B12 (N) (1) RRUS 4426 B66 (N)**		DC TRUNK (SHARED W/A1) FIBER TRUNK (SHARED W/A1)		0
	3	UMTS/LTE	COMMSCOPE (X) SBNHH-1D65C		120°	(1) RRUS 32 B2 (X)		DC TRUNK (SHARED W/A1) FIBER TRUNK (SHARED W/A1)		
	4	LTE 6C	**COMMSCOPE (N) NNH4-65B-R6H4**		120°	**(1) RRUS 4478 B14 (N)** (2) TMA (X)		DC TRUNK (SHARED W/A1) FIBER TRUNK (SHARED W/A1) (2) COAX (X)		0
G	1	LTE	COMMSCOPE (X) SBJAH4-1D65B-DL	127' AGL	240°	(1) RRUS 32 (X)		DC TRUNK (SHARED W/A1) FIBER TRUNK (SHARED W/A1) (2) COAX (X)	185'	0
	2	5G	**COMMSCOPE (N) NNH4-65B-R6H4**		240°	**(1) RRUS 4449 B5/B12 (N) (1) RRUS 4426 B66 (N)**		DC TRUNK (SHARED W/A1) FIBER TRUNK (SHARED W/A1)		0
	3	UMTS/LTE	COMMSCOPE (X) SBNHH-1D65C		240°	(1) RRUS 32 B2 (X)		DC TRUNK (SHARED W/A1) FIBER TRUNK (SHARED W/A1)		
	4	LTE 6C	**COMMSCOPE (N) NNH4-65B-R6H4**		240°	**(1) RRUS 4478 B14 (N)** (2) TMA (X)		DC TRUNK (SHARED W/A1) FIBER TRUNK (SHARED W/A1) (2) COAX (X)		0

* INCLUDES SAFETY FACTOR OF 20' FT. (10 FT. AT BOTH ENDS OF CABLE RUN). CONTRACTOR TO VERIFY RF DATA WITH AT&T WIRELESS CONSTRUCTION MANAGER AND/OR RF ENGINEER PRIOR TO INSTALLATION

(N) = NEW
(X) = EXISTING
(XR) = EXISTING/RELOCATED
(E) = ELECTRICAL
(M) = MECHANICAL

ANTENNA & CABLE CONFIGURATION

NOT TO SCALE | 1

AT&T
930 NATIONAL PARKWAY
SCHAUMBURG, IL 60173

SAC WIRELESS
540 W. MADISON ST.
8TH FLOOR
CHICAGO, IL 60661
www.sacw.com
312.895.4977

A&E
RAMAKER & ASSOCIATES, INC.
855 Community Dr, Sauk City, WI 53583
608-643-4100 www.Ramaker.com
Sauk City, WI • Willmar, MN
Woodcliff Lake, NJ • Bayamon, PR
RAI#:44993

LTE 6C/5G NR UPGRADE/ SBWE RRH SWAP
10080263
AWE – LAKE GENEVA WATER TOWER
1005 HOST DR. (AKA 1003 HOST DR.)
LAKE GENEVA, WI 53147

REVISIONS

REV.	DATE	DESCRIPTION	INITIALS
0	10/14/19	FOR CONSTRUCTION	CF
A	09/18/19	ISSUED FOR REVIEW	CF

NOT FOR CONSTRUCTION UNLESS LABELED AS FOR CONSTRUCTION

ENGINEER CERTIFICATION & SEAL:
I HEREBY CERTIFY THAT THIS PLAN, SPECIFICATION, OR REPORT WAS PREPARED BY ME OR UNDER MY DIRECT SUPERVISION AND THAT I AM A DULY LICENSED PROFESSIONAL ENGINEER UNDER THE LAWS OF THE STATE OF WISCONSIN.

Signature: Joshua M Cooper Date: 10/14/2019

SHEET TITLE
ANTENNA & CABLE CONFIGURATION

SHEET NUMBER
A7

THE INFORMATION CONTAINED IN THIS SET OF CONSTRUCTION DOCUMENTS IS PROPRIETARY BY NATURE. ANY USE OR DISCLOSURE OTHER THAN THAT WHICH RELATES TO CARRIER SERVICES IS STRICTLY PROHIBITED.

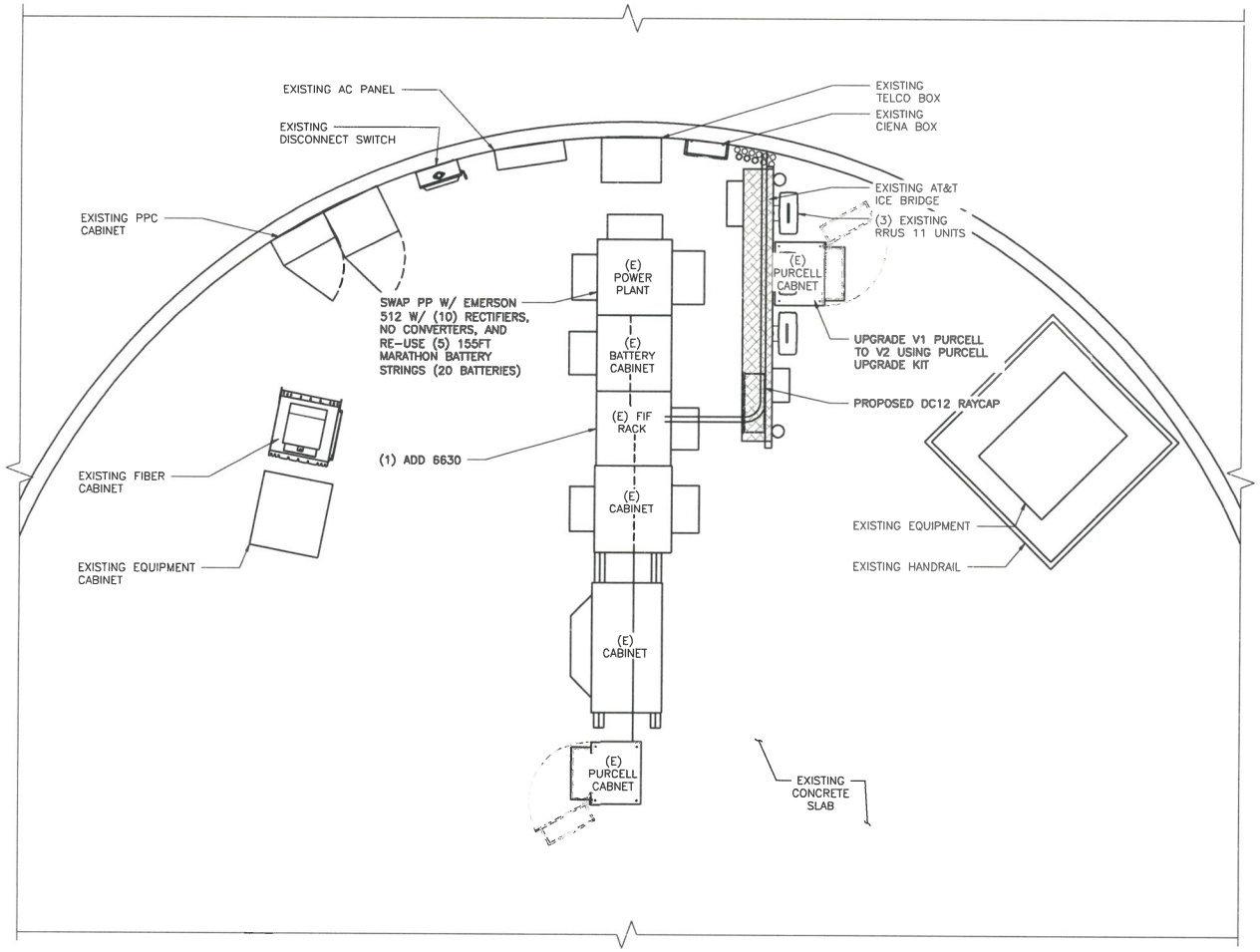

LEGEND:

1. PROVIDE (1) 25A DC CIRCUIT BREAKER PER RRUSS UNIT INSIDE EXISTING -48V DC POWER PLANT. (TOTAL OF 3)
2. (1) NEW SURGE PROTECTION UNIT TO BE INSTALLED INSIDE FIF RACK.
3. PROVIDE (2) SETS OF 6-"8 AWG DC CONDUCTOR BUNDLE BETWEEN PROPOSED CIRCUIT BREAKERS INSIDE EXISTING DC POWER PLANT AND EXISTING RAYCAP SURGE PROTECTION UNIT ON EXISTING FIF RACK.
4. EXISTING (2) SETS OF 6-"8 AWG DC CONDUCTOR BUNDLE BETWEEN NEW SURGE PROTECTION UNIT ON EXISTING FIF RACK AND RAYCAP UNIT MOUNTED NEAR ANTENNA TO BE REUSED.

NOTES:

1. COORDINATE WITH CONSTRUCTION MANAGER FOR THE PROVISION OF DC CIRCUIT BREAKERS AND OTHER ANCILLARY ITEMS TO SUPPORT THE NEW EQUIPMENT.
2. PROPERLY BOND ALL EQUIPMENT AND CONDUCTIVE SURFACES TO EXISTING GROUND PER NEC AND AT&T STANDARDS.

LTE 6C 700 FNET GROUND SCOPE:

ADD (1) 6630, IDLE CABLE, SFPS.

5G NR UPGRADE GROUND SCOPE:

ADD GPS SPLITTER, SFPS, AND (1) OUTDOOR DC12 RAYCAP.
DECOM & REMOVE EXIST GEN1 DC12 RAYCAP FROM PP CABINET AND RE-PLUMB ASSOCIATED DC TRUNKS TO PROPOSED DC12.
SWAP PP W/ EMERSON 512 W/ (10) RECTIFIERS, NO CONVERTERS, AND RE-USE (5) 155FT MARATHON BATTERY STRINGS (20 BATTERIES). UPGRADE V1 PURCELL TO V2 USING PURCELL UPGRADE KIT.

AWS RRU SWAP GROUND SCOPE:

ADD SFPS.

NORTH

UTILITY PLAN

0 6" 1' 2'

SCALE: 1/2" = 1'-0" (24x36)
(OR) 1/4" = 1'-0" (11x17)

1

AT&T
930 NATIONAL PARKWAY
SCHAUMBURG, IL 60173

SAC WIRELESS
540 W. MADISON ST.
37TH FLOOR
CHICAGO, IL 60661
www.sacw.com
312.895.4977

A&E
RAMAKER & ASSOCIATES, INC.
855 Community Dr, Sauk City, WI 53583
608-643-4100 www.Ramaker.com
Sauk City, WI · Willmar, MN
Woodcliff Lake, NJ · Bayamon, PR
RAF:44993

LTE 6C/5G NR UPGRADE/ SBWE RRH SWAP
10080263
AWE – LAKE GENEVA WATER TOWER
1005 HOST DR. (AKA 1003 HOST DR.)
LAKE GENEVA, WI 53147

REVISIONS

REV.	DATE	DESCRIPTION	INITIALS
0	10/14/19	FOR CONSTRUCTION	CF
A	09/18/19	ISSUED FOR REVIEW	CF

NOT FOR CONSTRUCTION UNLESS LABELED AS FOR CONSTRUCTION

ENGINEER CERTIFICATION & SEAL:

I HEREBY CERTIFY THAT THIS PLAN, SPECIFICATION, OR REPORT WAS PREPARED BY ME OR UNDER MY DIRECT SUPERVISION AND THAT I AM A DULY LICENSED PROFESSIONAL ENGINEER UNDER THE LAWS OF THE STATE OF WISCONSIN.

Joshua M Cooper 10/14/2019
Signature: Date:

SHEET TITLE
UTILITY PLAN

SHEET NUMBER
E1

THE INFORMATION CONTAINED IN THIS SET OF CONSTRUCTION DOCUMENTS IS PROPRIETARY BY NATURE. ANY USE OR DISCLOSURE OTHER THAN THAT WHICH RELATES TO CARRIER SERVICES IS STRICTLY PROHIBITED.

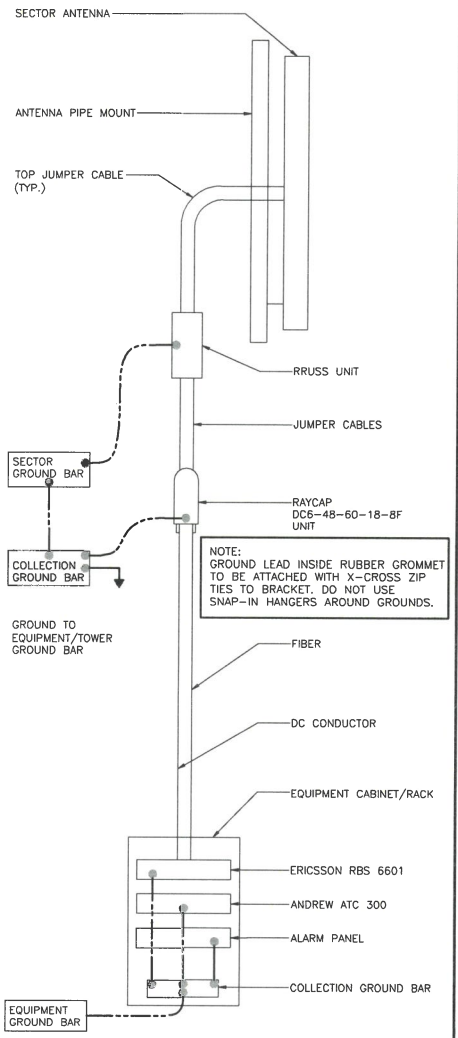

NOTE:
GROUND LEAD INSIDE RUBBER GROMMET TO BE ATTACHED WITH X-CROSS ZIP TIES TO BRACKET. DO NOT USE SNAP-IN HANGERS AROUND GROUNDS.

CABLE GROUNDING | NO SCALE | 4

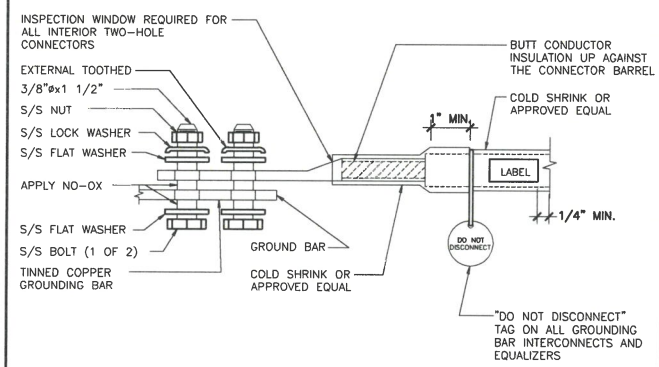

EXTERIOR TWO HOLE LUG DETAIL | NO SCALE | 3

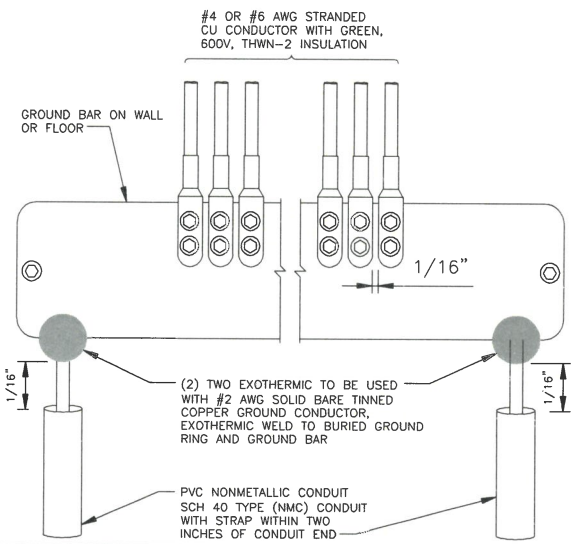

GROUND BAR DETAILS | NO SCALE | 2

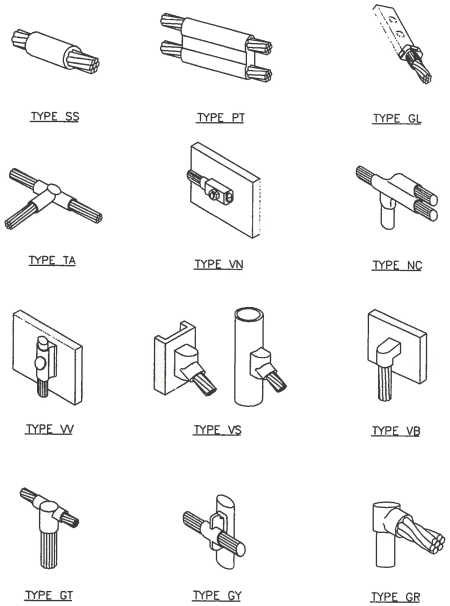

CADWELD DETAILS | NO SCALE | 1

THE INFORMATION CONTAINED IN THIS SET OF CONSTRUCTION DOCUMENTS IS PROPRIETARY BY NATURE. ANY USE OR DISCLOSURE OTHER THAN THAT WHICH RELATES TO CARRIER SERVICES IS STRICTLY PROHIBITED.

AT&T
930 NATIONAL PARKWAY
SCHAUMBURG, IL 60173

SAC WIRELESS
540 W. MADISON ST.
9TH FLOOR
CHICAGO, IL 60661
www.sacw.com
312.695.4977

A&E RAMAKER & ASSOCIATES, INC.
855 Community Dr, Sauk City, WI 53583
608-643-4100 www.Ramaker.com
Sauk City, WI • Willmar, MN
Woodcliff Lake, NJ • Bayamon, PR
RA#:44993

LTE 6C/5G NR UPGRADE/ SBWE RRH SWAP
10080263
AWE – LAKE GENEVA WATER TOWER
1005 HOST DR. (AKA 1003 HOST DR.)
LAKE GENEVA, WI 53147

REVISIONS

REV.	DATE	DESCRIPTION	INITIALS
0	10/14/19	FOR CONSTRUCTION	CF
A	09/18/19	ISSUED FOR REVIEW	CF

NOT FOR CONSTRUCTION UNLESS LABELED AS FOR CONSTRUCTION

ENGINEER CERTIFICATION & SEAL:
I HEREBY CERTIFY THAT THIS PLAN, SPECIFICATION, OR REPORT WAS PREPARED BY ME OR UNDER MY DIRECT SUPERVISION AND THAT I AM A DULY LICENSED PROFESSIONAL ENGINEER UNDER THE LAWS OF THE STATE OF WISCONSIN.

Joshua M Opsata 10/14/2019
Signature: Date:

SHEET TITLE
GROUNDING DETAILS

SHEET NUMBER
G1